2.2A-10003-B06

Quicklub – Progressive Metering Devices for Grease and Oil

Model SSV D
Planning and Layout of Progressive Centralized Lubrication Systems

6495b05

Subject to modifications

LINCOLN GmbH & Co. KG • Postfach 1263 • D-69183 Walldorf • Tel +49 (6227) 33-0 • Fax +49 (6227) 33-259

© 2006 by
LINCOLN GmbH & Co. KG
Postfach 1263 Phone: +49 (6227) 33-0
D-69183 Walldorf Fax: +49 (6227) 33-259

Table of Contents

Further information can be found in the following manuals:

Technical Description QUICKLUB - Pump 203
Technical Description for "Electronic Control Units" of Pump 203:
Printed-Circuit Board 236-13857-1 - Variant H [1)]
Printed-Circuit Board 236-13862-1 - Variant V10 - V13 [1)]
Printed-Circuit Board 236-13870-1 - Variant M 08 - M 15 [1)]
Printed-Circuit Board 236-13870-1 - Variant M 16 - M 23 [1)]
Installation Instructions
Parts Catalog

[1)] The model designation of the printed-circuit board is part of the pump model designation indicated on the pump nameplate. Example: P 203 - 2XN - 1K6 - 24 - 1A1.10 - **V10**

LINCOLN GmbH & Co. KG • Postfach 1263 • D-69183 Walldorf • Tel +49 (6227) 33-0 • Fax +49 (6227) 33-259

Introduction

Explanation of Symbols Used

The following description standards are used in this manual:

Safety Instructions

Structure of safety instructions:

- Pictogram
- Signal word
- Danger text
  - Danger note
  - How to avoid danger

The following pictograms are used in this manual and are combined with the corresponding signal words:

 1013A94	 4273a00	 6001a02
- ATTENTION **- CAUTION** **- WARNING**	**- ATTENTION** **- CAUTION** **- WARNING**	**- NOTE** **- IMPORTANT**

The signal words give the seriousness of danger if the following text is not observed:

ATTENTION	refers to faults or damages on machines.
CAUTION	refers to bad damages and possible injuries.
WARNING	refers to possible dangerous injuries.
NOTE	indicates improved operation of the device.
IMPORTANT	indicates special operating features of the device.

Example:


1013A94

ATTENTION!

When making use of other than the tested spare parts, serious damage may affect your device.

Therefore, for the operation of your device always use original spare parts made by Lincoln GmbH & Co. KG.

Furthermore, you will find the following text symbols in this manual:

- Listing of applicable statements
  - Subpoint of applicable statements

1. Determination of the number or sequence of contents

➲ Procedural instruction

User's Responsibility

To ensure the safe operation of the unit, the user is responsible for the following:

1. The pump / system shall be operated only for the intended use (see next chapter "Safety Instructions") and its design shall neither be modified nor transformed.
2. The pump / system shall be operated only if it is in a proper functioning condition and if it is operated in accordance with the maintenance requirements.
3. The operating personnel must be familiar with this Owner Manual and the safety instructions mentioned within and observe these carefully.

The correct installation and connection of tubes and hoses, if not specified by Lincoln GmbH & Co. KG, is the user's responsibility. Lincoln GmbH & Co. KG will gladly assist you with any questions pertaining to the installation.

Environmental Protection

Waste (e.g. used oil, detergents, lubricants) must be disposed of in accordance with relevant environmental regulations.

Service

The personnel responsible for the handling of the pump / system must be suitably qualified. If required, Lincoln GmbH & Co. KG offers you full service in the form of advice, on-site installation assistance, training, etc. We will be pleased to inform you about our possibilities to support you purposefully. In the event of inquiries pertaining to maintenance, repairs and spare parts, we require model specific data to enable us to clearly identify the components of your pump / system. Therefore, always indicate the part, model and series number of your pump / system.

LINCOLN GmbH & Co. KG • Postfach 1263 • D-69183 Walldorf • Tel +49 (6227) 33-0 • Fax +49 (6227) 33-259

Safety Instructions

Appropriate Use

Use SSV D lubricant metering devices only for dispensing lubricants in centralized lubrication systems.

Suitable Lubricants

- The progressive metering devices model SSV D can be used for dispensing
  - mineral oils of at least 40 mm²/s (cST) or
  - greases up to the penetration class NLGI 2

6001a02

IMPORTANT

It must nevertheless be ensured that the oils or greases used do not alter their consistency significantly in the course of time or under the influence of temperature or pressure.

General Safety Instructions

- The progressive centralized lubrication system connected to a pump must always be secured with a pressure relief valve.
- Lincoln SSV D lubricant metering devices are state of the art.
- Incorrect use may result in bearing damage caused by poor or excessive lubrication.
- Each outlet needed must be provided with a check valve in order to be able to feed the lube points with the precise amount of lubricant and avoid poor lubrication.
- In the case of the metering devices model SSV D 6 to SSV D 22 outlets 1 and 2 must never be closed.
- Outlets 1 and 2 of the special metering devices model SSVD 6/5 to 22/21 are connected via a channel (marked by a double arrow). One of the two outlets must be closed. This means, the lubricant quantity of the closed outlet is lead to the opposite outlet (see page 17, fig. 19).

1013A94

CAUTION!

Damage due to poor lubrication!

If, however, both outlets are connected to a lube point the bypass metering device SSV D 6/5 to 22/21 cannot work to 100 %. The lubricant follows the way of the lowest resistance. It reaches the lube points of outlets 1 and 2 only insufficiently or not at all.

- Unauthorized modifications or changes to an installed system are not admissible. Any modification must be subject to prior consultation with the manufacturer of the lubrication system.
- Use only original Lincoln spare parts (see Parts Catalog) or the parts approved by Lincoln.

Regulations for Prevention of Accidents

Adhere to the regulations for prevention of accidents that are effective in the country where the system is to be used.

Operation, Repair and Maintenance

Repair should only be performed by:

- authorized and
- instructed personnel

who are familiar with centralized lubrication systems.

Installation

- Install the metering devices at a suitable location in accordance with the lubrication diagram.
- It is recommended that the metering devices be installed in such a way that the outlets are not close to the chassis or the attaching plate. This will facilitate troubleshooting in case the system is blocked.
- Main metering devices with indicator pin must be installed in such a way that the indicator pin is easily visible.

If push-in type fittings are used, note the following

- For the metering **device inlet** use only **push-in type fittings** (R 1/8) with **reinforced collets** and sealing ring.
- For the **outlet tube fittings** of the **SSV metering device** (M 10x1) depending on the design of the lubricant line, for example
  - for high-pressure hose (NW 4.1 x 2.3 mm) use only **valve bodies with reinforced collets**
  - for pressure plastic tube (ø 6 x 1.5 mm) use only **valve bodies with knurled collets**

6001a02

NOTE

In the case of construction machines or agricultural machines use high-pressure plastic hoses for the lubricant feed lines. In such cases the outlet fittings of the secondary metering devices and the connection fittings to the lubricant points must have a reinforced collets.

- Use only main lines and feed lines specified by Lincoln and adhere to the specified system pressures.

1013A94

CAUTION!

Danger of injury in the case of serious corrosion of metering device surfaces:

An increasing corrosion of the surfaces will cause the balls pressed in to lose their hold. Under pressure they may suddenly burst out and cause injuries.

For applications in corrosive environments, use metering devices in stainless steel version only.

LINCOLN GmbH & Co. KG • Postfach 1263 • D-69183 Walldorf • Tel +49 (6227) 33-0 • Fax +49 (6227) 33-259

Installation

Tube Fittings, Screw type

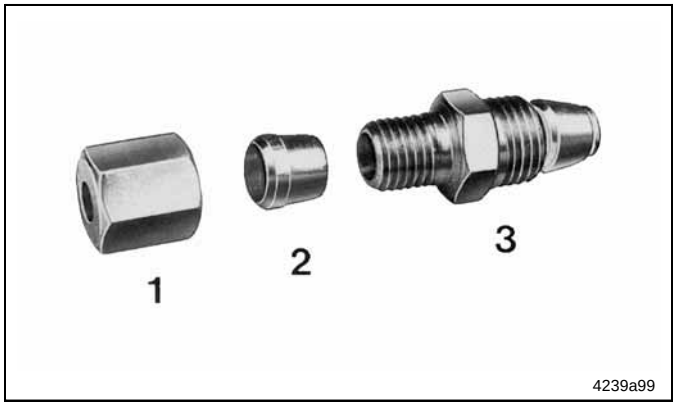

Fig. 1 Single parts of the check valve

Main- and secondary metering devices SSV D

Inlet tube fittings, straight and 90°

As inlet fitting use only tube fittings R1/8” thread.

Check valves

Install one complete check valve in each outlet bore that will be used, see fig. 1.

Install one closure plug in each outlet borehole that will not be used. Exception: outlet bore 1 & 2 on SSV D 6 to SSV D 14. Check valves must be installed in both bores.

Check valves are available for tube dia. 4 mm and 6 mm.

1 - coupling nut
2 - ferrule
3 - valve body with seal and clamp ring

Tube Fittings, Push-in type

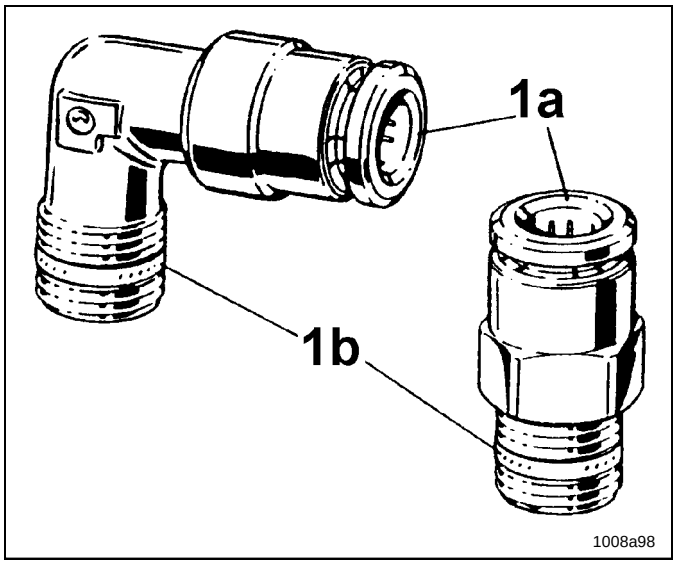

Fig. 2 Inlet fittings

Metering devices

Inlet tube fittings, straight and 90 °

6001a02

IMPORTANT

*For the inlet fittings **use only tube fittings with reinforced collet** 1a (fig. 2) and sealing ring 1b at the thread.*

1a - Collet
1b - Sealing ring

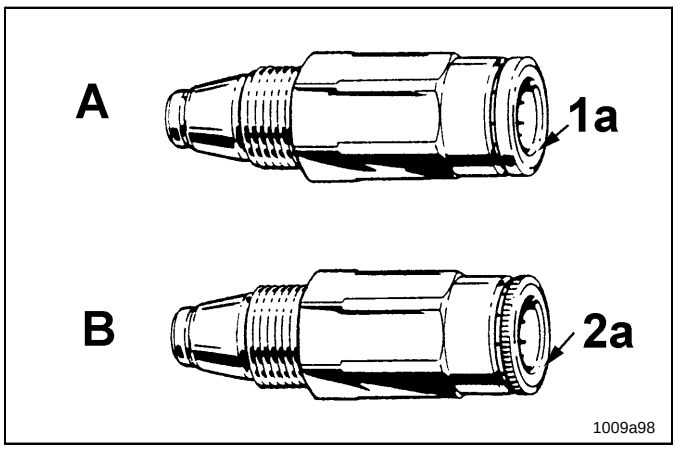

Fig. 3 The different types of check valve

Check valves

- A check valve must be mounted to the corresponding metering device outlet of each feed line in order to be able to precisely meter the predefined amount of lubricant.
- Main metering device
  Use check valves type A, Fig.3 with reinforced collet 1a and smooth flange (Part no. 226-14091-4).
- Secondary metering device
  Use check valves type B, Fig. 3 with standard collet 2a and knurled flange (Part no. 226-14091-2).

6001a02

NOTE

On construction machines or agricultural machines use high-pressure plastic hoses. In such cases the check valves of the secondary metering devices must have a reinforced collet and smooth flange.

A - Check valve with reinforced collet
B - Check valve with knurled collet
1a - reinforced collet
2a - knurled collet

LINCOLN GmbH & Co. KG • Postfach 1263 • D-69183 Walldorf • Tel +49 (6227) 33-0 • Fax +49 (6227) 33-259

Installation, continuation

Tube Fittings, Push-in Type, continuation

Connection of High-pressure Hose and Pressure Plastic Tube

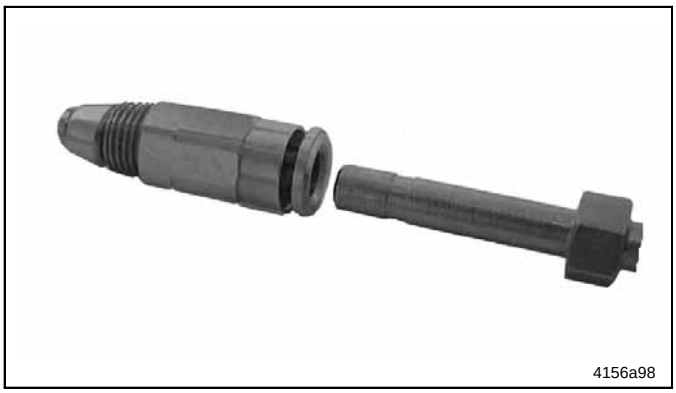

Fig. 4 Check valve with reinforced collet and hose stud

High-pressure range (main metering device)

6001a02

IMPORTANT

Only main lines (NW 4.1 x 2.3 mm) with threaded sleeve and hose stud may be connected to the inlet fitting and the check valves with reinforced collar.

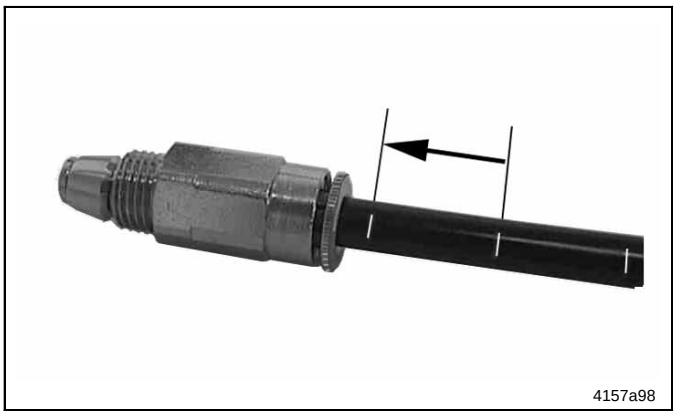

Fig. 5 Check valve with knurled collet and pressure plastic tube

Low-pressure range (secondary metering device)

Connect the pressure plastic tube (ø 6x1.5 mm) to the check valve with standard collet (knurled collet) and to the inlet fittings towards the lubrication point (knurled collet).

6001a02

NOTE

Special cases, such as applications for construction machines or agricultural machines, require the use of check valves and inlet fittings (towards the lube point) with reinforced collet also for the low-pressure range. Refer to Parts Catalog.

- The pressure plastic tubes are marked with white lines (Fig. 5) as an installation aid.

➲ Cut the pressure plastic tube off at one of the white lines before it is mounted. Then insert the pressure plastic tube into the fitting up to the next white mark.

This will ensure a correct installation of the pressure plastic tube in the tube fitting.

Fig. 6 Push-in type fitting with protective cap

Protective cap for push-in type fittings

Push-in type fittings, check valves and pressure relief valves can be closed with a protective cap in order to avoid contamination.

Designation	**Part No.**
Protective cap	432-24313-1

LINCOLN GmbH & Co. KG • Postfach 1263 • D-69183 Walldorf • Tel +49 (6227) 33-0 • Fax +49 (6227) 33-259

Installation, continuation

Pressure Plastic Tubes and High-pressure Hoses

Pressure plastic tubes Ø 6 x 1.5 mm

- Use the pressure plastic tubes only in the low-pressure area, i.e. between secondary metering device and lubrication point.

6001a02

NOTE

Adhere to the pressures and bending radiuses mentioned in the chapter "Technical Data" when installing the parts and operating the device.

High-pressure hose NW 4.1 x 2.3 mm

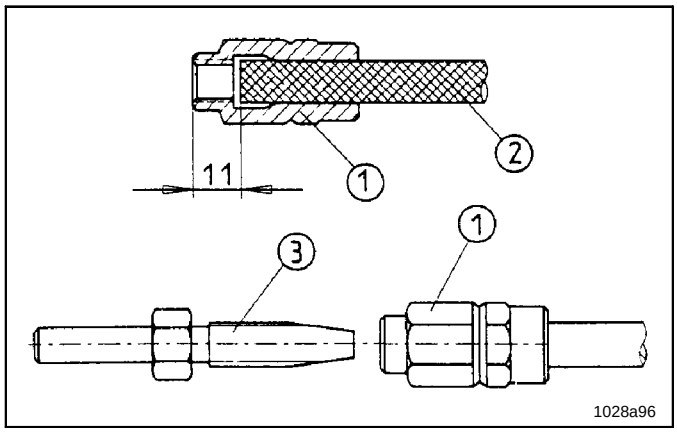

Fig. 7 Preassembly of threaded sleeves and hose studs on the high-pressure hose

1 - Threaded sleeve
2 - High-pressure hose NW 4.1 x 2.3 mm
3 - Hose stud

- Use the high-pressure hose in the high-pressure area, i.e. between the pump, main metering device and secondary metering devices.
- Adhere to the pressures and bending radiuses mentioned in the chapter "Technical Data" when installing the parts and operating the device.

Installing the threaded sleeves and hose studs on the high-pressure hose

➲ Screw threaded sleeve, item 1 Fig. 7, counterclockwise onto high-pressure plastic hose 2 until illustrated dimension of 11 mm is reached. Then screw hose stud 3 into threaded sleeve 1.

6001a02

IMPORTANT

Before screwing the parts 1 and 3, rub them with oil.

NOTE

The outside diameter of the high-pressure hose may show variations in dimension. In such a case, press the threaded sleeve 1 at the end where it will be screwed onto the high-pressure hose so that it becomes oval in shape (1 to 2 mm). This will prevent the high-pressure plastic hose from being pushed out of the sleeve when the hose stud is screwed.

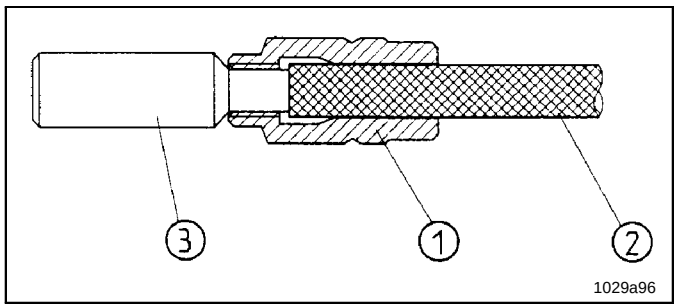

Fig. 8 Preassembly of threaded sleeve by means of adjusting gauge

1 - Threaded sleeve
2 - High-pressure hose NW 4.1 x 2.3 mm
3 - Adjusting gauge 432-23077-1

6001a02

NOTE

When using the special adjusting gauge 432-23077-1 (see Parts Catalog) screw threaded sleeve counterclockwise onto high-pressure plastic hose until the gauge inserted in the sleeve begins to rise.

LINCOLN GmbH & Co. KG • Postfach 1263 • D-69183 Walldorf • Tel +49 (6227) 33-0 • Fax +49 (6227) 33-259

Description

Progressive Metering Device Model SSV D

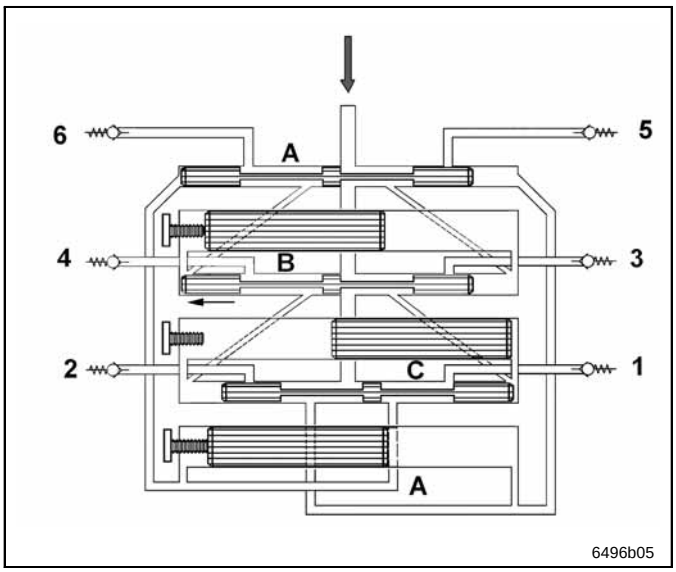

Fig. 9 Schematic of the SSV D metering device

1 - 6 Outlets
A - C Control and metering piston

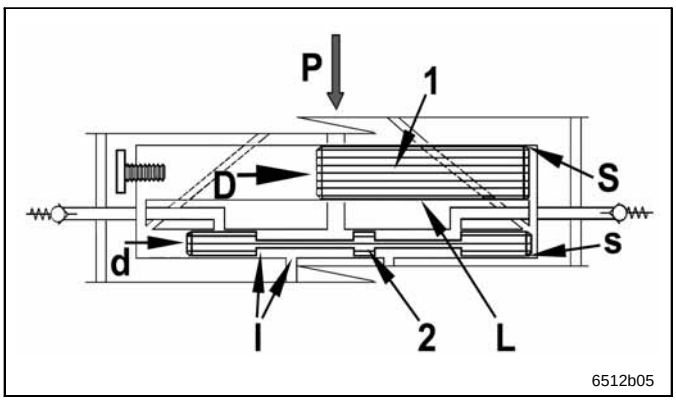

Fig. 10 Metering and control piston assy

1 - Metering piston
2 - Control piston
P - Input pressure
D - Larger metering piston diameter
d - Smaller control piston diameter
S - Larger fit-tolerance of the metering piston
s - Smaller fit-tolerance of the control piston
L - Continual running surfaces of metering piston and cylinder
l - Interrupted running surfaces of control piston and cylinder

Progressive Plunger Metering Devices, General

- The progressive metering devices
  - are piston-operated metering devices.
  - automatically (progressively) dispense the lubricant fed by the pump to the connected lubrication points.
  - have a **lubricant output of** 0.07 / 0.14 / 0.2 / 0.3 / 0.4 / 0.6 / 0.8 / 1.0 / 1.4 und 1.8 cm³ per outlet and piston stroke (see page 12, paragraph „Metering Screw “).
  - when one or more outlets are closed (see page 17, paragraph „Cross-porting of Outlets“) they can dispense double or multiple lubricant quantities.
  - are available with 1 to 22 outlets.
  - offer the option of combining several lubrication points into one centralized lubrication point.
  - meter the supplied lubricant into predetermined single quantities.
  - can be monitored visually (see indicator pin, Fig. 22, page 18) or electronically (see piston detector or proximity switch, Fig. 23, page 19).
  - offer optimum metering possibilities by means of one or more subsequently positioned SSV D metering devices.
- Any blockage in a lubrication circuit is indicated by grease leaking from the respective pressure relief valve.

Features of a Progressive Metering Device

- The term ”progressive**” refers to the special features of the lubricant distribution within the metering devices, e.g.**
  - the successive movements of the individual pistons within the metering device due to the supplied lubricant being under pressure;
  - the pistons move in a predetermined order and the cycles are repeated constantly;
  - each piston must have completed its movement fully before the next piston can be moved, no matter whether the lubricant is dispensed continuously or intermittently;
  - the pistons operate interdependently of one another;
  - no lubrication point that is connected to the system is omitted.

Function Principle and Reliability

- The progressive function sequence results from the interaction (see Fig. 12-18, as of page 11) of each metering and control piston assy (see Fig. 10) whereby the metering piston has priority over the control piston.
- The softer running of the metering piston is warranted by several factors:
  - Larger piston surface D at constant input pressure P in the total SSV D
  - Assembly with larger fit-tolerance S
  - Continual running surfaces of piston and cylinder

LINCOLN GmbH & Co. KG • Postfach 1263 • D-69183 Walldorf • Tel +49 (6227) 33-0 • Fax +49 (6227) 33-259

Operation

Lubricant Distribution within the Metering Device

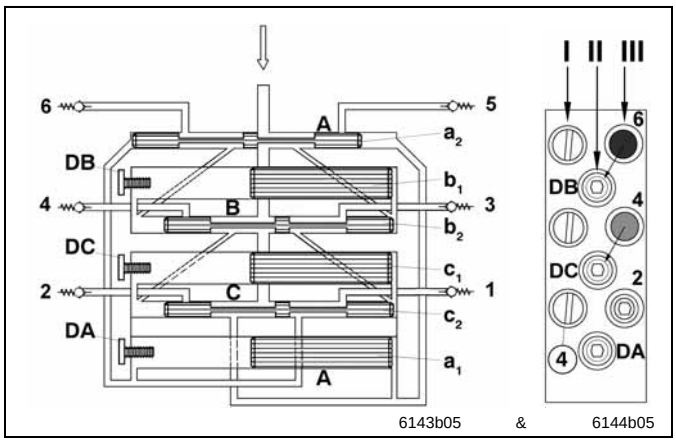

Fig. 11 Schematic drawing and view from the left to the metering device

I - control piston level
II - metering piston level
III - outlet level
1 - 6 outlet number
A – C pair of pistons (metering and control piston)
a_1 – c_1 metering piston
a_2 – c_2 control piston
DA - metering screw for metering piston A
DB - metering screw for metering piston B
DC - metering screw for metering piston C
④ - piston closure plug (comp. Pos. 4, Fig. 26, page 20)

General

The illustrations fig. 12 to 18 show how the lubricant is distributed to each outlet.

6001a02

NOTE

To simplify the description we only show the lubricant distribution for outlets 6, 4, 2, 5, 3 and 1. The remaining distribution operations are derived from the logical pumping sequence.

Metering screws (DA, DB, DC) are always mounted on the side with the even outlet numbers. On the side with odd outlet numbers, closure screws are used only.

The SSV D has three functional levels. They are visible from both sides due to three bore rows (see pos. I to III, Fig. 11):

I. Control piston level (behind closure plugs)
II. Metering piston level
(medium level behind metering screws)
III. Outlet level
(behind closure screws and connecting screws)

Metering Screws

6001a02

IMPORTANT NOTE

For each lube cycle, the output of the metering piston (V1) and the control piston (V2) is dispensed on one outlet.

The metering piston stroke and the related output can be adjusted by means of metering screws of different lengths.
Short metering screws allow for a long stroke of the metering piston. I.e. with the shortest metering screw you achieve the maximum output.
The longest metering screw compresses the metering piston completely, so that only the lubricant quantity of the control piston (0,08 cm³) is dispensed.

This metering has a proper impact on both of the outlet bores:

Metering screw	***Pair of outlets***
DB	*6 and 5*
DC	*4 and 3*
DA	*2 and 1 (see Fig. 11)*

NOTE

For the classification of the metering screw lengths and their metering quantities, see page 33, Tab. 3.

When the lubricant supply is interrupted

6001a02

IMPORTANT

When the lubricant supply is interrupted, please observe:

- *The pistons come to a halt.*
- *The lubricant is no longer dispensed to the lubrication point.*

When the lubricant is fed again to the metering device, the cycle begins from the point where it had been interrupted.

LINCOLN GmbH & Co. KG • Postfach 1263 • D-69183 Walldorf • Tel +49 (6227) 33-0 • Fax +49 (6227) 33-259

Operation, continuation

Lubricant Distribution within the Metering Device, continuation

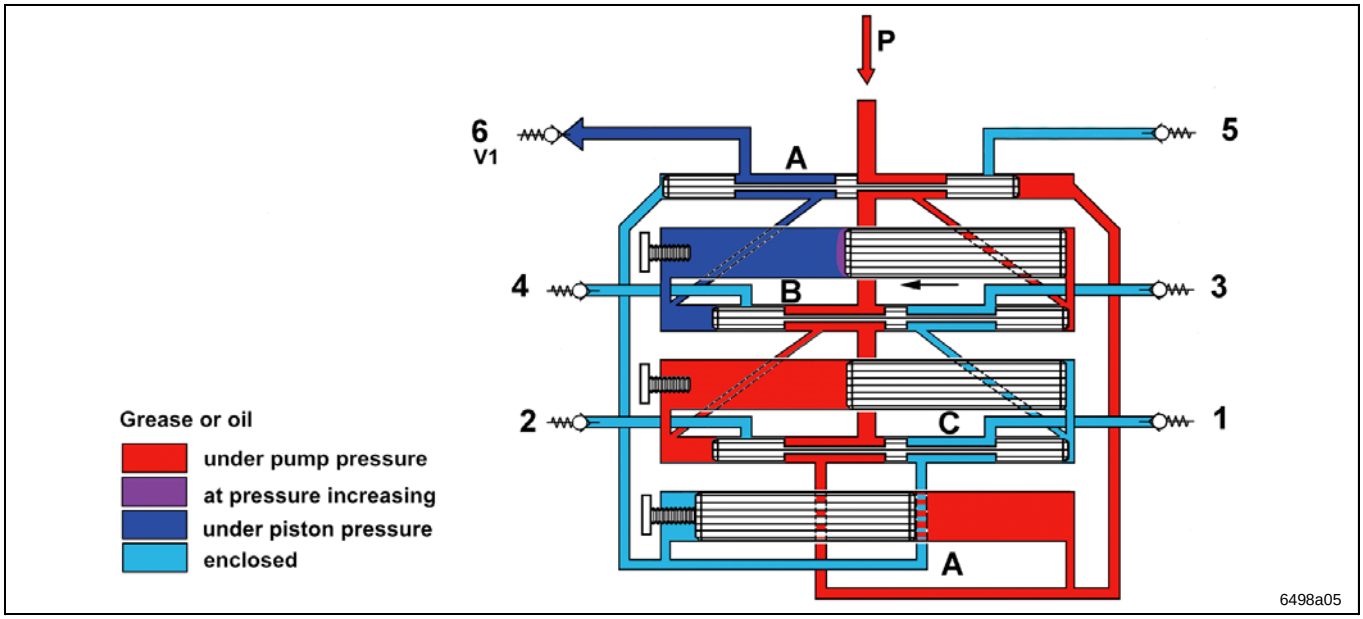

Fig. 12 Phase 1: Metering piston B supplies V1

Phase 1

- The lubricant pressure P is built up from the top (arrow P) in the lubricant metering device and is available on the right end of control piston B and metering piston B.
- Due to the bigger diameter the lubricant pressure P first moves metering piston B (black arrow) to the left and then supplies the enclosed lubricant on the left side of metering piston B to outlet 6 (**V1**).

Phase 2

- When the metering piston B reaches its final position on the left side, the lubricant pressure P moves the control piston B (black arrow) to the left and additionally supplies the lubricant enclosed on the left side of control piston B to outlet 6 (**V2**).
- The total output on outlet 6 is the output of metering piston B and control piston B (**V1 + V2**).

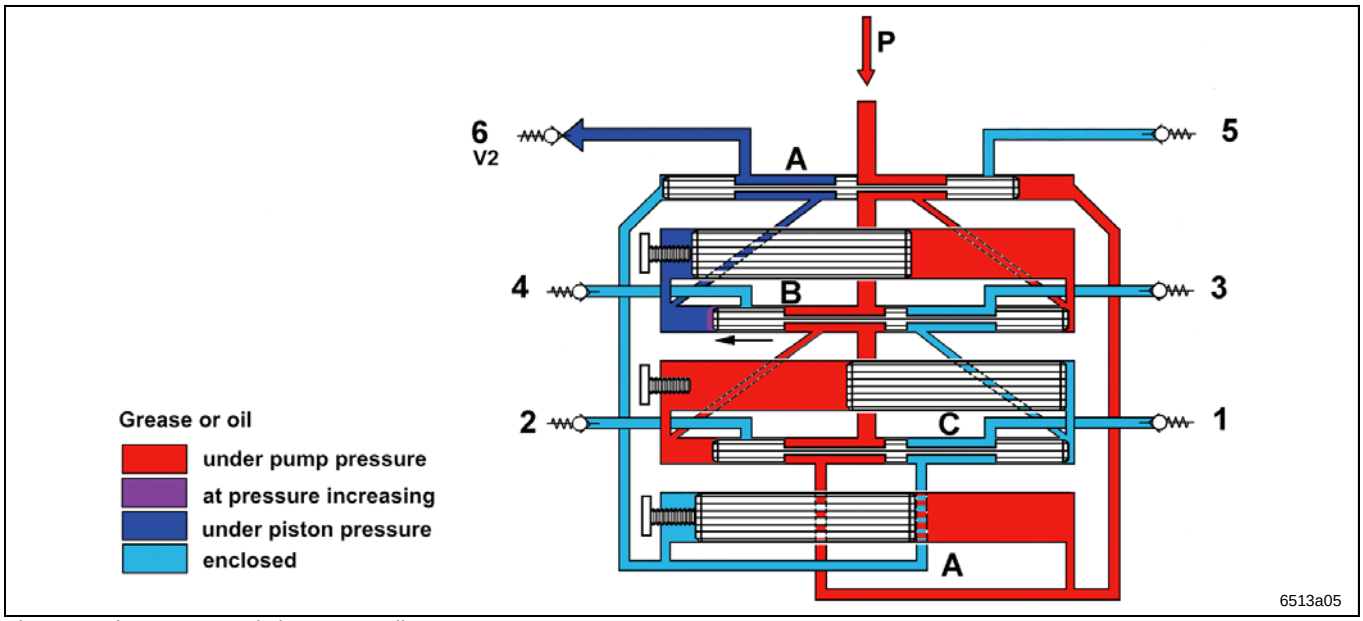

Fig. 13 Phase 2: Control piston B supplies V2

LINCOLN GmbH & Co. KG • Postfach 1263 • D-69183 Walldorf • Tel +49 (6227) 33-0 • Fax +49 (6227) 33-259

Operation, continuation

Lubricant Distribution within the Metering Device, continuation

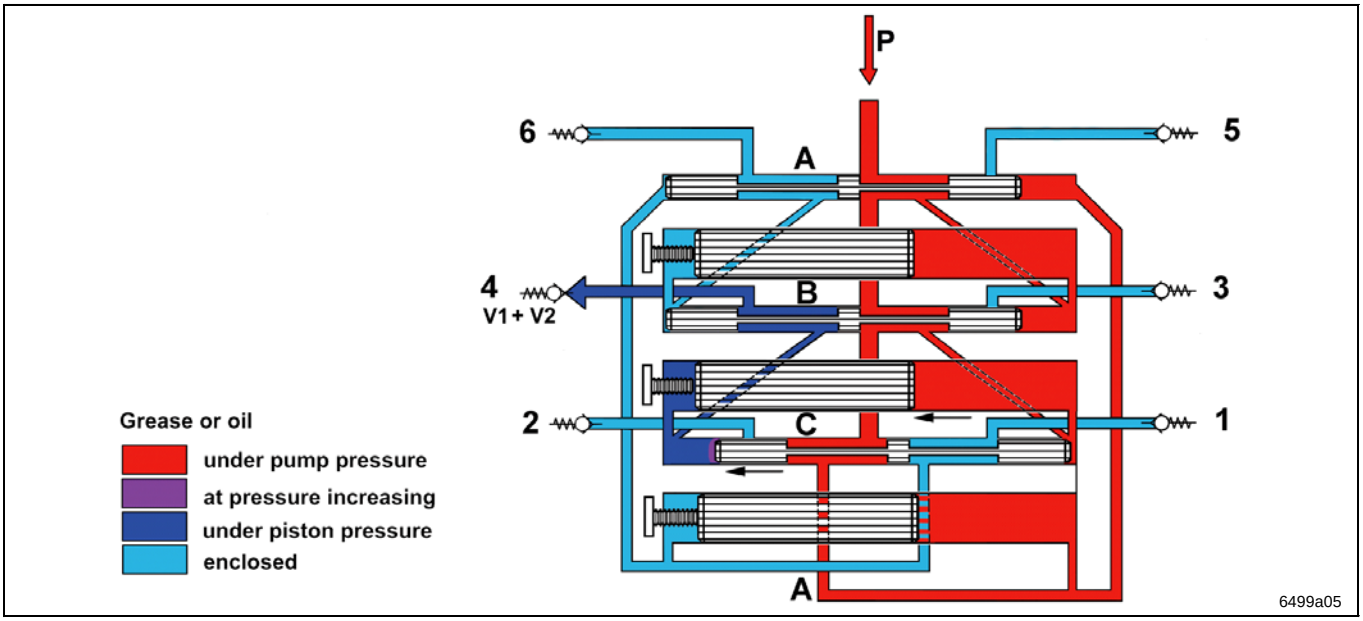

Fig. 14 Phase 3 & 4: Metering piston C supplies V1, Control piston C supplies V2

Phase 3

- In phase 3, control piston B has reached its final position on the left side.
- Thereby it opens the junction channel to the right end of control piston C and metering piston C.
- Now the lubricant pressure P is at the right end of control piston C and metering piston C.
- Due to the larger diameter, the lubricant pressure P first moves metering piston C (black arrow) to the left and then supplies the enclosed lubricant on the left side of metering piston C to outlet 4 (**V1**).

Phase 4

- When metering piston C reaches its final position on the left side, lubricant pressure P moves the control piston C (black arrow) to the left and additionally supplies the enclosed lubricant on the left side of control piston C to outlet 4 (**V2**).
- The total output on outlet 4 is the output of metering piston C and control piston C (**V1 + V2**).

6001a02

NOTE

The upper figure shows the transition from phase 3 to phase 4.

Fig. 12 and fig. 13 (see page 11) show exemplary schematics of the movements of metering and control pistons.

Notes:

LINCOLN GmbH & Co. KG • Postfach 1263 • D-69183 Walldorf • Tel +49 (6227) 33-0 • Fax +49 (6227) 33-259

Operation, continuation

Lubricant Distribution within the Metering Device, continuation

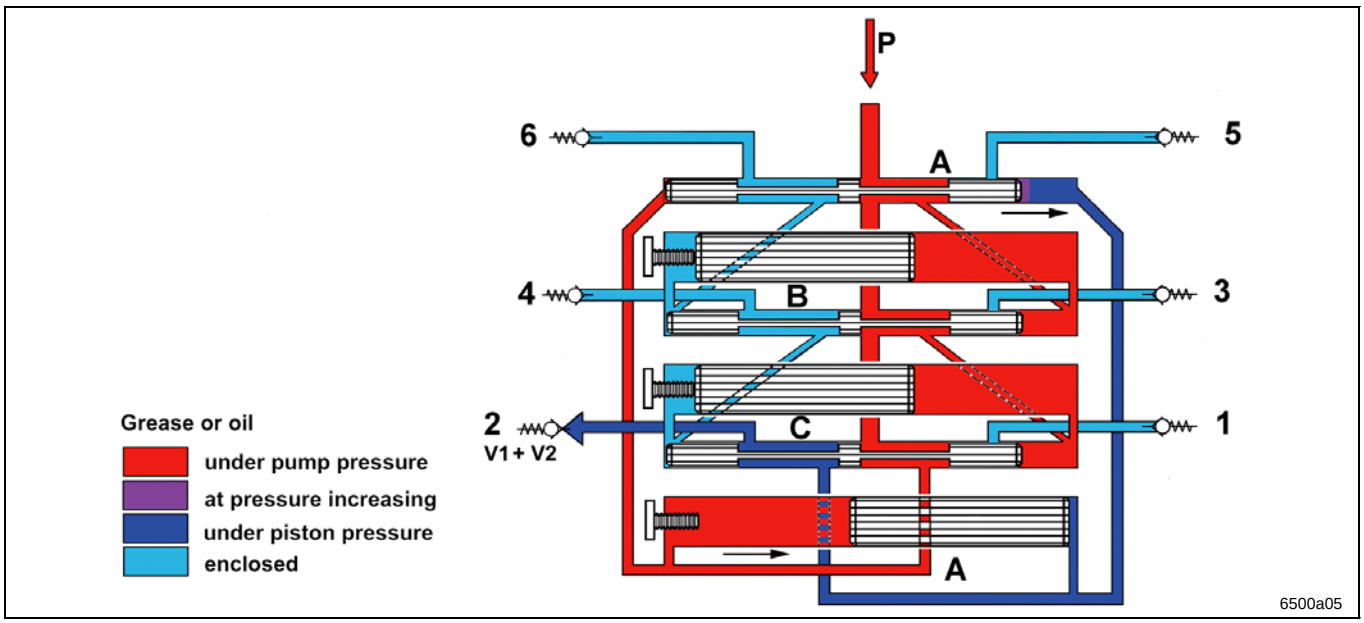

Fig. 15 Phase 5 & 6: Metering piston A supplies V1, Control piston A supplies V2

Phase 5

- In phase 5, control piston C has reached its final position on the left side.
- Thereby it opens the junction channel to the right end of control piston A and metering piston A.
- Now the lubricant pressure P is at the right end of control piston A and metering piston A.
- Due to the larger diameter, lubricant pressure P first moves the metering piston A (black arrow) to the left and then supplies the enclosed lubricant on the left side of metering piston A to outlet 2 (**V1**).

Phase 6

- When metering piston A reaches its final position on the left side, lubricant pressure P moves the control piston A (black arrow) to the left and additionally supplies the enclosed lubricant on the left side of control piston A to outlet 2 (**V2**).
- The total output on outlet 2 is the output of metering piston A and control piston A (**V1 + V2**).

6001a02

NOTE

The upper figure shows the transition from phase 5 to phase 6.

Fig. 12 and fig. 13 (see page 11) show exemplary schematics of the movements of metering and control pistons.

Notes:

LINCOLN GmbH & Co. KG • Postfach 1263 • D-69183 Walldorf • Tel +49 (6227) 33-0 • Fax +49 (6227) 33-259

Operation, continuation

Lubricant Distribution within the Metering Device, continuation

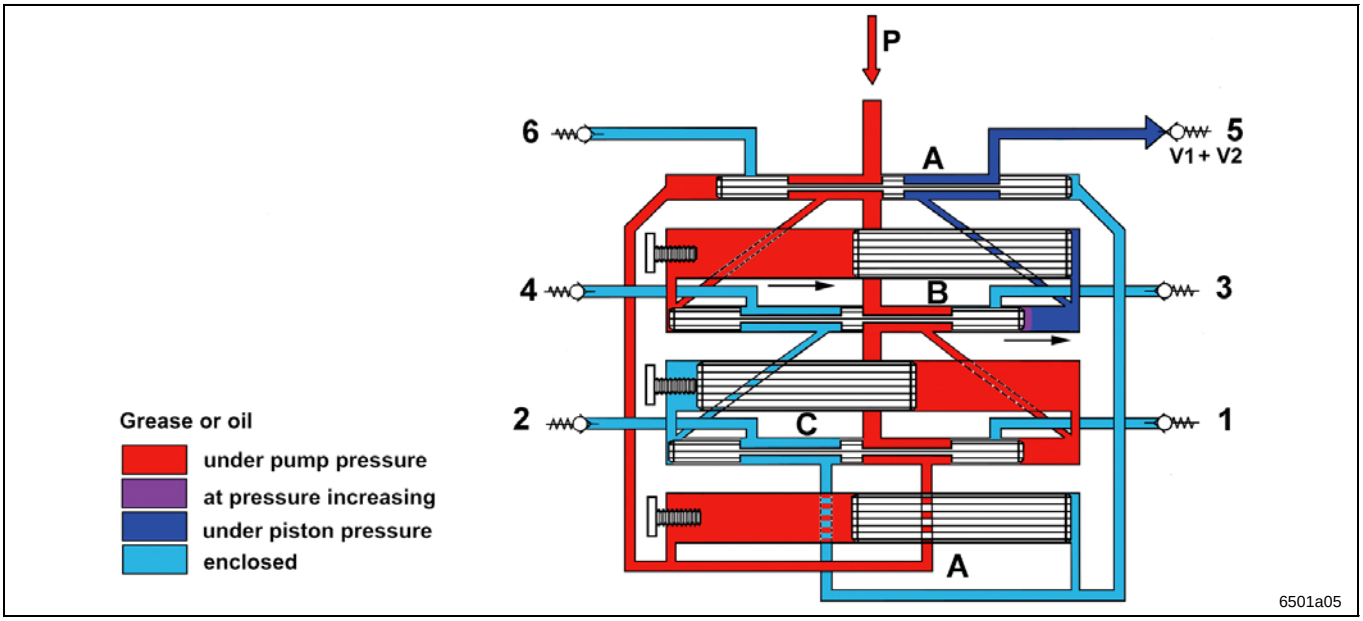

Fig. 16 Phase 7 & 8: Metering piston B supplies V1, Control piston B supplies V2

Phase 7

- In phase 7, control piston A has reached its final position on the right side.
- Thereby it opens the junction channel to the left end of control piston B and metering piston B.
- Now the lubricant pressure P is at the left end of control piston B and metering piston B.
- Due to the larger diameter, lubricant pressure P first moves the metering piston B (black arrow) to the right and then supplies the enclosed lubricant on the right side of metering piston B to outlet 5 (**V1**).

Phase 8

- When the metering piston B reaches its final position on the right side, lubricant pressure P moves the control piston B (black arrow) to the right and additionally supplies the enclosed lubricant on the right side of control piston B to outlet 5 (**V2**).
- The total output on outlet 5 is the output of metering piston B and control piston B (**V1 + V2**).

6001a02

NOTE

The upper figure shows the transition from phase 7 to phase 8.

Fig. 12 and fig. 13 (see page 11) show exemplary schematics of the movements of metering and control pistons.

Notes:

LINCOLN GmbH & Co. KG • Postfach 1263 • D-69183 Walldorf • Tel +49 (6227) 33-0 • Fax +49 (6227) 33-259

Operation, continuation

Lubricant Distribution within the Metering Device, continuation

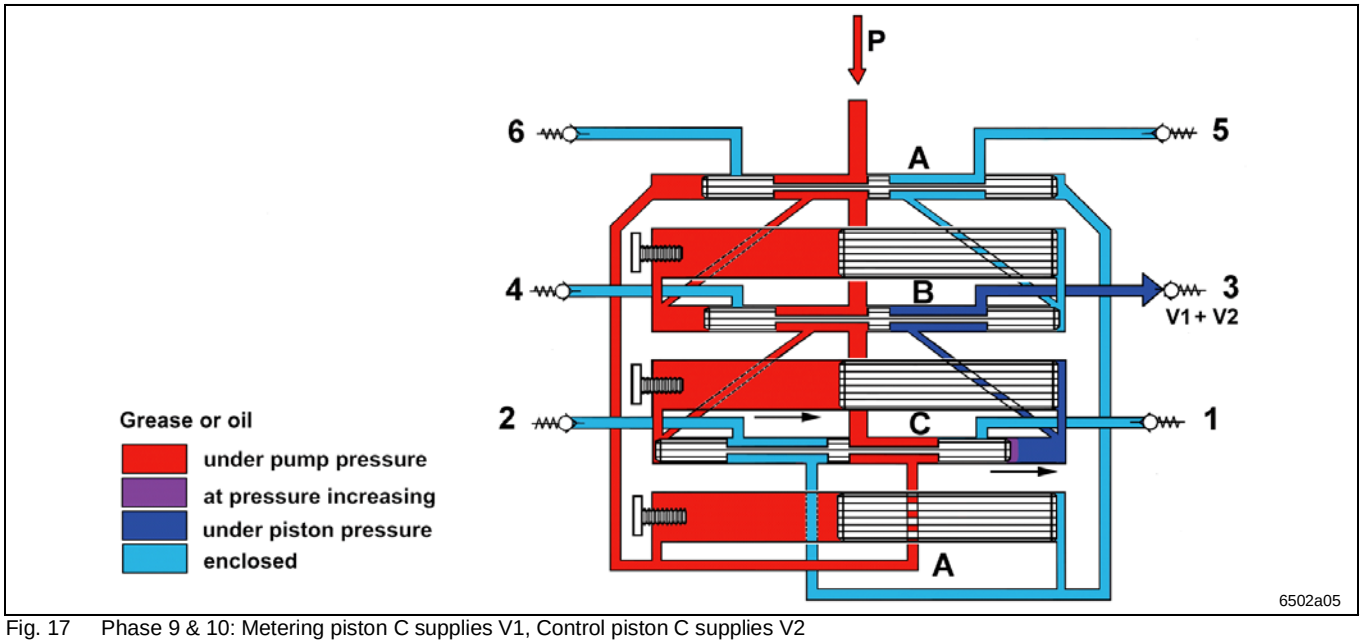

Fig. 17 Phase 9 & 10: Metering piston C supplies V1, Control piston C supplies V2

Phase 9

- In phase 9, control piston B has reached its final position on the right side.
- Thereby it opens the junction channel to the left end of control piston C and metering piston C.
- Now the lubricant pressure P is at the left end of control piston C and metering piston C.
- Due to the larger diameter, the lubricant pressure P first moves metering piston C (black arrow) to the right and then supplies the enclosed lubricant on the right side of metering piston C to outlet 5 (**V1**).

Phase 10

- When the metering piston C reaches its final position on the right side, lubricant pressure P moves the control piston C (black arrow) to the right and additionally supplies the enclosed lubricant on the right side of control piston C to outlet 5 (**V2**).
- The total output on outlet 5 is the output of metering piston C and control piston C (**V1 + V2**).

6001a02

NOTE

The upper figure shows the transition from phase 9 to phase 10.

Fig. 12 and fig. 13 (see page 11) show exemplary schematics of the movements of metering and control pistons.

Notes:

LINCOLN GmbH & Co. KG • Postfach 1263 • D-69183 Walldorf • Tel +49 (6227) 33-0 • Fax +49 (6227) 33-259

Operation, continuation

Lubricant Distribution within the Metering Device, continuation

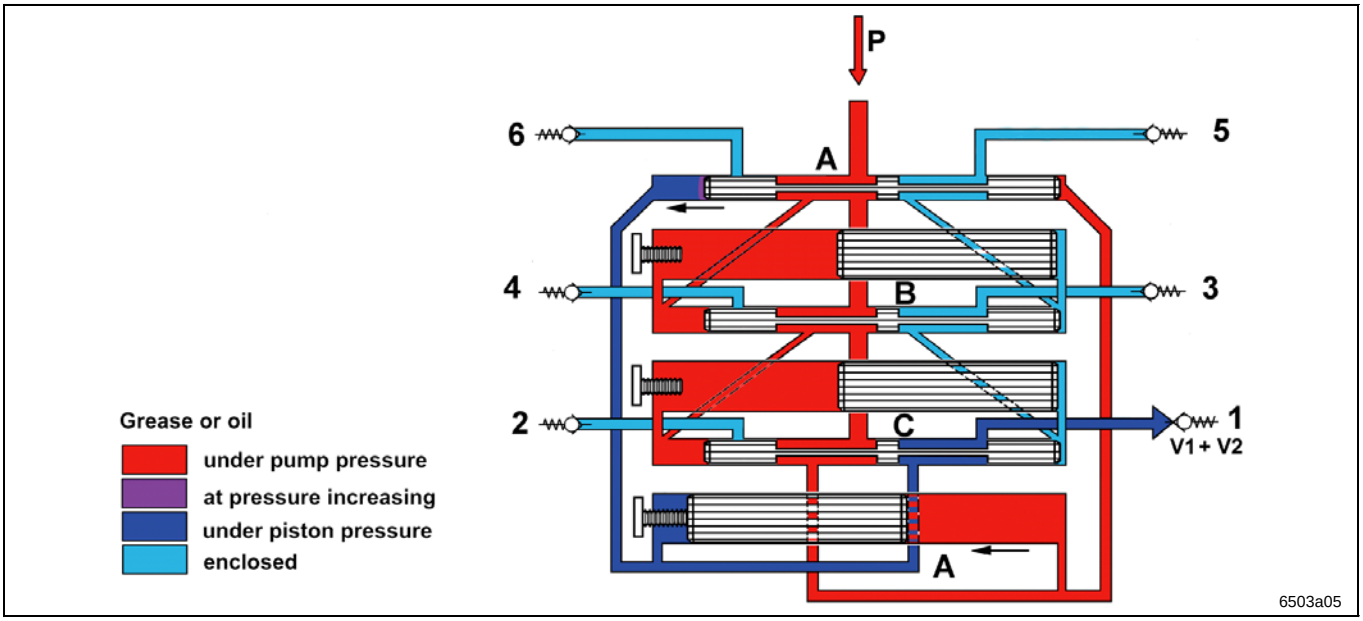

Fig. 18 Phase 11 & 12: Metering piston B supplies V1, Control piston B supplies V2

Phase 11

- In phase 11, control piston C has reached its final position on the right side.
- Thereby it opens the junction channel to the left end of control piston A and metering piston A.
- Now the lubricant pressure P is at the left end of control piston A and metering piston A.
- Due to the larger diameter, lubricant pressure P first moves the metering piston A (black arrow) to the right and then supplies the enclosed lubricant on the right side of metering piston A to outlet 5 (**V1**).

Phase 12

- When the metering piston A reaches its final position on the right side, lubricant pressure P moves the control piston A (black arrow) to the right and additionally supplies the enclosed lubricant on the right side of control piston A to outlet 5 (**V2**).
- The total output on outlet 5 is the output of metering piston A and control piston A (**V1 + V2**).
- Now, a full cycle of the metering device has been completed and a new one can start (see phase 1, page 11).

6001a02

NOTE

The upper figure shows the transition from phase 11 to phase 12.

Fig. 12 and fig. 13 (see page 11) show exemplary schematics of the movements of metering and control pistons.

Notes:

LINCOLN GmbH & Co. KG • Postfach 1263 • D-69183 Walldorf • Tel +49 (6227) 33-0 • Fax +49 (6227) 33-259

Operation, continuation

Lubricant Distribution within the Metering Device, continuation

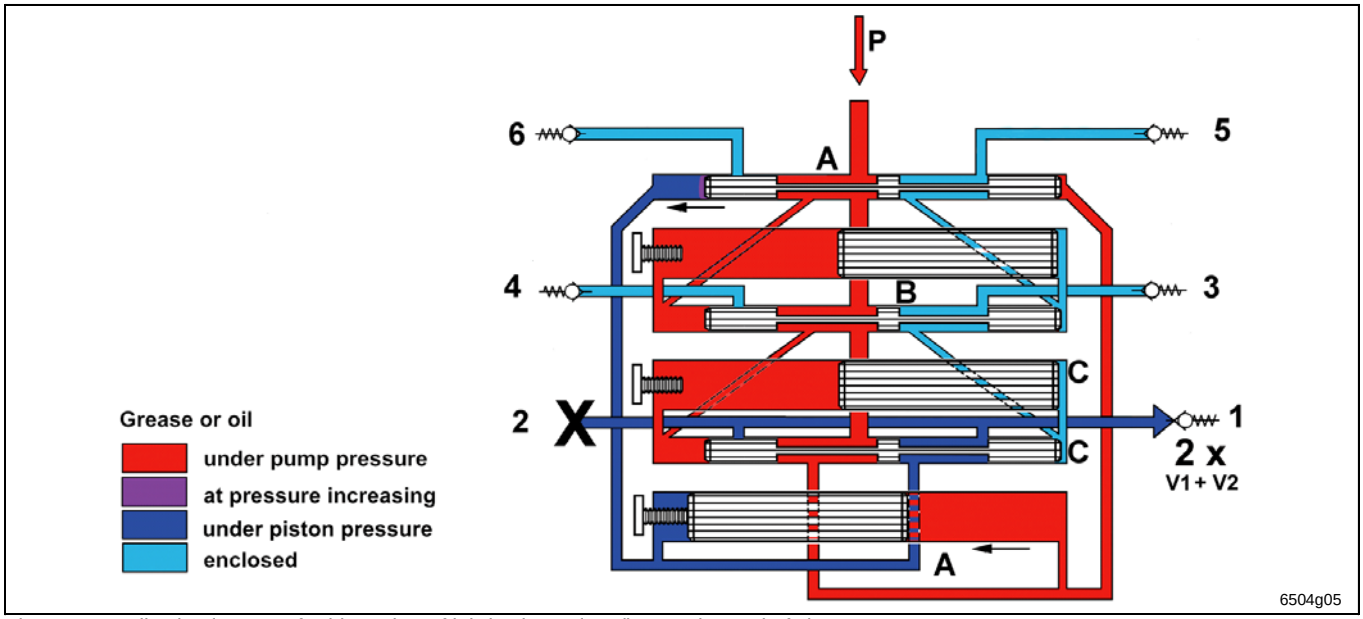

Fig. 19 Application in case of odd number of lubrication points (here: 5 instead of 6)

Cross-porting of outlets, internal

- For the lubricant metering devices SSV D 6/5 to 22/21 with an internal cross-porting of outlets (bypass metering device), outlets 1 and 2 are connected (see broken-lined junction channel between outlet 2 and 1).
- One outlet of one side of the metering device is closed in order to be able to use the double lubricant quantity on the other side.

  Outlet V =
  $V1_{Phase\ 5} + V2_{Phase\ 6} + V1_{Phase\ 11} + V2_{Phase\ 12}$
- Thus the cross-porting of outlets results in further metering possibilities:
  From assigning one metering device outlet per lubrication point to cross-porting all outlets to one lubrication point, almost all combinations are practicable.

Cross-porting of outlets, external

- Opposite outlets of metering devices SSV and SSV D may also be cross-ported externally and then be connected to a lube point with a tee piece.

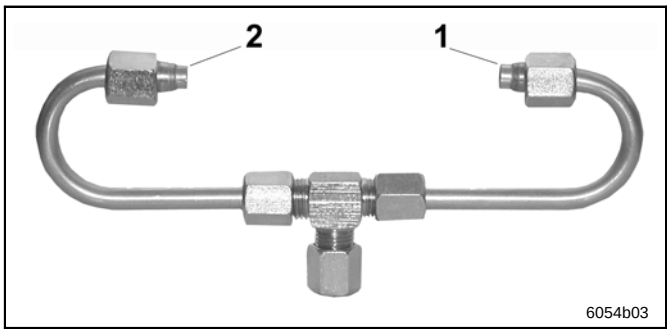

Fig. 20 External cross-porting of lubricant quantities, screw type

Notes:

LINCOLN GmbH & Co. KG • Postfach 1263 • D-69183 Walldorf • Tel +49 (6227) 33-0 • Fax +49 (6227) 33-259

Operation, continuation

Monitoring of the Operation

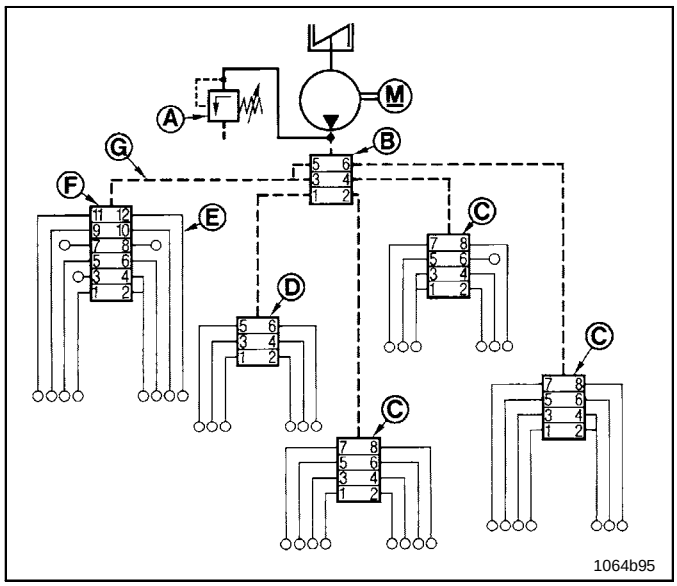

Fig. 21 Example of a lubrication system

System-dependent monitoring

- Main metering device B and secondary metering devices C, D, F are connected by high-pressure hoses G. This results forcingly in a functional interlink of the complete progressive lubrication system.
- The structure of a progressive metering device warrants it auto-monitoring and the monitoring of the operation of the complete lubrication system.
- As soon as a piston in a metering device has a failure, it blocks the relevant metering device.
- If any metering device fails, due to the functional interlink also the main metering device blocks. This means, the complete progressive system is stopped!

A -	pressure relief valve	E -	pressure plastic tube
B -	main metering device SSV 6	F -	secondary metering device SSV 12
C -	secondary metering device SSV 8	G -	High-pressure hose
D -	secondary metering device SSV 6		

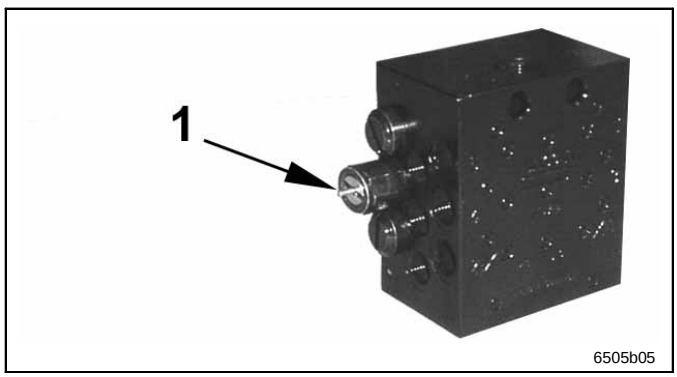

Fig. 22 Indicator pin installed on metering device

1 - Control pin tube fitting

Visual monitoring

- The metering devices can be equipped with an indicator pin that is connected to the piston and moves back and forth during lubricant distribution.
- If there is a blockage in the system, the indicator pin stops moving.

6001a02

NOTE

It is also possible to electrically check the movements of the indicator pin or any blockage in the system by means of a proximity switch (KN, without fig.).

Control pin tube fitting

Closure plug, assy. M11 x 1
pos. 1 519-32123-1

LINCOLN GmbH & Co. KG • Postfach 1263 • D-69183 Walldorf • Tel +49 (6227) 33-0 • Fax +49 (6227) 33-259

Operation, continuation

Monitoring of the Operation, continuation

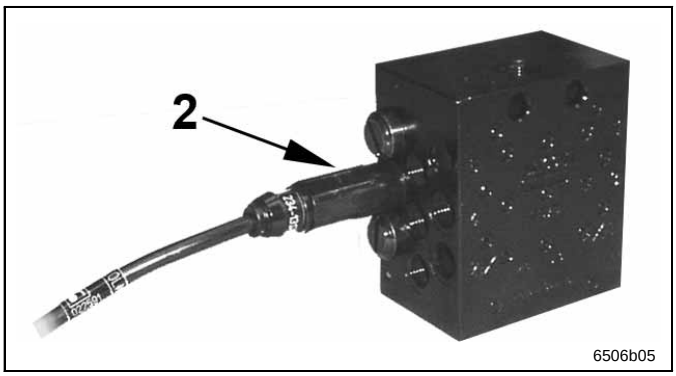

Fig. 23 Metering device with piston detector
2 - Piston detector

Electrical monitoring (microprocessor control)

- **A piston detector** (initiator, pos. 2) that has been installed on a metering device instead of a piston closure plug monitors the pump **operating time** and brings it to a close after all the pistons of this metering device have dispensed their lubricant quantity.
- If there is a blockage or the pump reservoir is empty, the piston detector can no more detect any piston movement. The switching off signal is not transmitted to the control unit. A fault signal occurs.

6001a02

NOTE

*For the system monitoring it is recommended that **one SSV D metering device with pre-assembled piston detector** be used per lubrication circuit. These special metering devices must be ordered separately for each lubrication system. Refer to the Parts Catalog.*

- The pre-assembled metering devices have the designation **SSV D 6-…-N to 22-…-N** (they are available for SSV D 6, 8, 10, 12 to 22). They must be installed in the system instead of a normal metering device (SSV D).

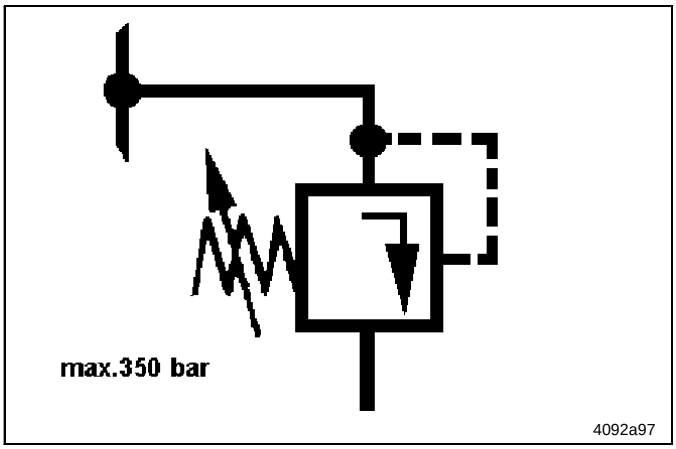

Fig. 24 Pressure relief valve

Pressure relief valve

- The complete system can be visually monitored on the pressure relief valve of the pump. If lubricant is leaking at the pressure relief valve during the distribution sequence, this indicates that there is a blockage in the system.

6001a02

IMPORTANT

*In the case of the progressive metering devices models SSV D 6 to SSV D 22 the **outlets 1 and/or 2 must never be closed**, otherwise the system would block owing to the structure of the metering device.*

Adjusting the Output by Using Metering Screws

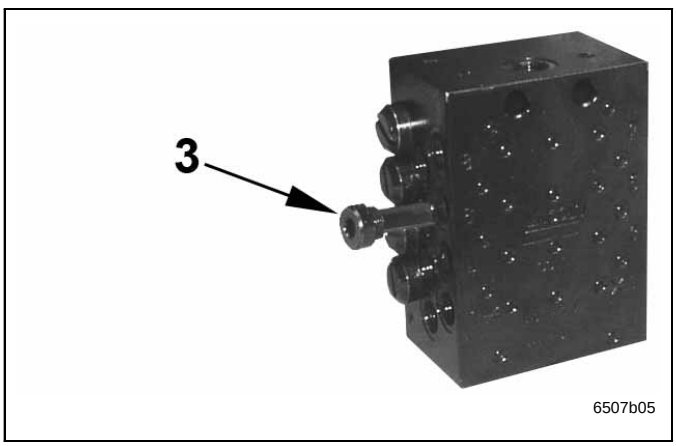

Fig. 25 Screwing in of metering screws
3 - Metering screw

- The metering quantities per piston stroke and outlet may be adjusted by using metering screws of different lengths.
- Depending on the length of the metering screw, various outputs are possible (see page 33, Tab. 3).

6001a02

NOTE

Further adaptations of the output result from an internal cross-porting of outlets (see page 20 and 21).

LINCOLN GmbH & Co. KG • Postfach 1263 • D-69183 Walldorf • Tel +49 (6227) 33-0 • Fax +49 (6227) 33-259

Operation, continuation

Adapting the Lubricant Output by Cross-porting of Outlets

Tube fittings, screw type

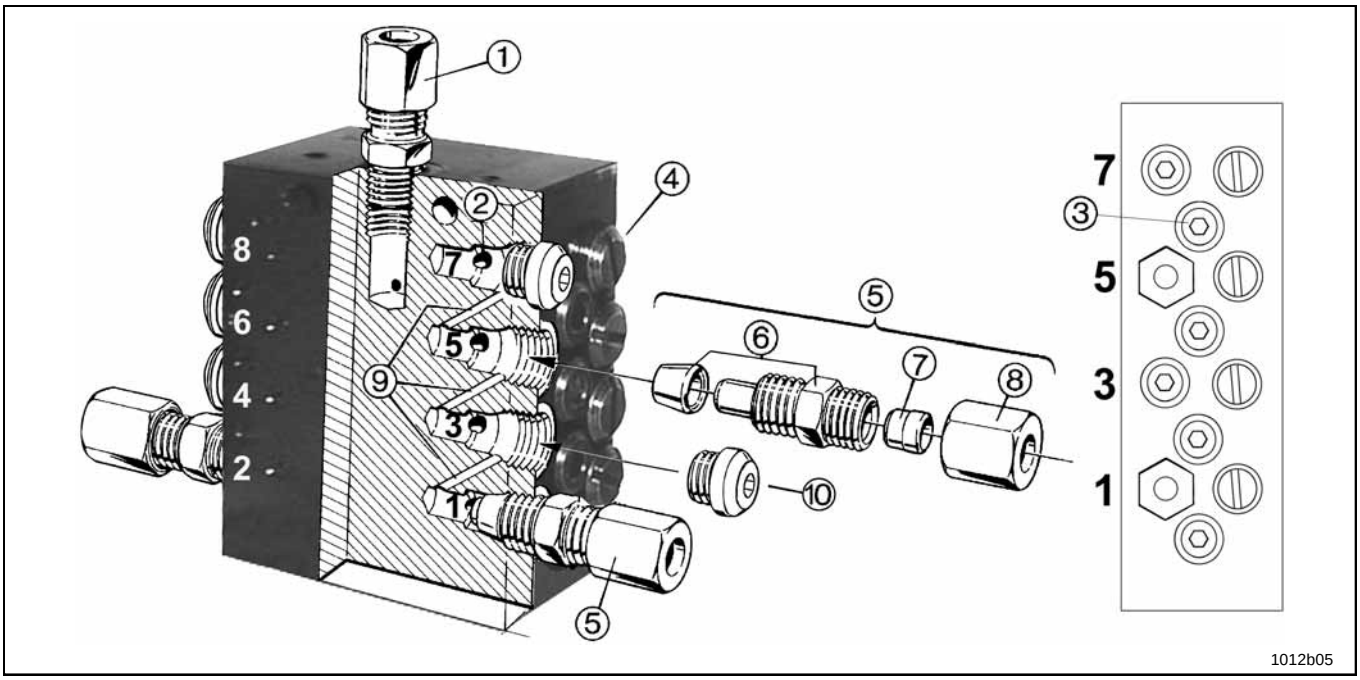

Fig. 26 Install the push-in type outlet fittings and the closure plugs in accordance with the dosage

1 -	Inlet fitting	4 -	Closure plug (M11 x 1), piston (with chamfer)	8 -	Coupling nut
2 -	Delivery hole of the metering piston and control piston	5 -	Outlet fitting assembly (M10 x 1)	9 -	Junction channel
3 -	Metering screw (M10 x 1)	6 -	Valve body with clamping ring (brass)	10 -	Closure plug with hex. socket head
		7 -	Cutting ring		

- Apart from an adjustment by means of metering screws, (see page 19) you may also increase the output by closing outlet bores.
- Install an outlet fitting assembly (pos. 5, M 10 x 1) in each outlet bore to be used.
- **Never remove closure plug** (pos. 4, **M11 x 1 chamfered**) on the piston side or remove it only for installing a piston detector.
- Clamping ring (pos. A, Fig. 28) closes the junction channels (pos. 9) to the other outlet channels.

6001a02

NOTE

In the case of push-in type fittings the clamping ring is always a firm component of the valve body (pos. 6).

IMPORTANT

*In the case of the progressive metering devices **model SSV D 6 to SSV D 22**, **outlets 1 and 2 must never be closed**, otherwise the system would block due to the structure of the metering device.*
In case of progressive metering devices whose outlets 1 and 2 can be cross-ported, one outlet must be closed. Thereby the lubricant quantity of one outlet side may be dispensed on the other side of the metering device.

LINCOLN GmbH & Co. KG • Postfach 1263 • D-69183 Walldorf • Tel +49 (6227) 33-0 • Fax +49 (6227) 33-259

Operation, continuation

Adapting the Lubricant Output by Cross-porting of Outlets , continuation

Tube fittings, push-in type (main or secondary metering devices)

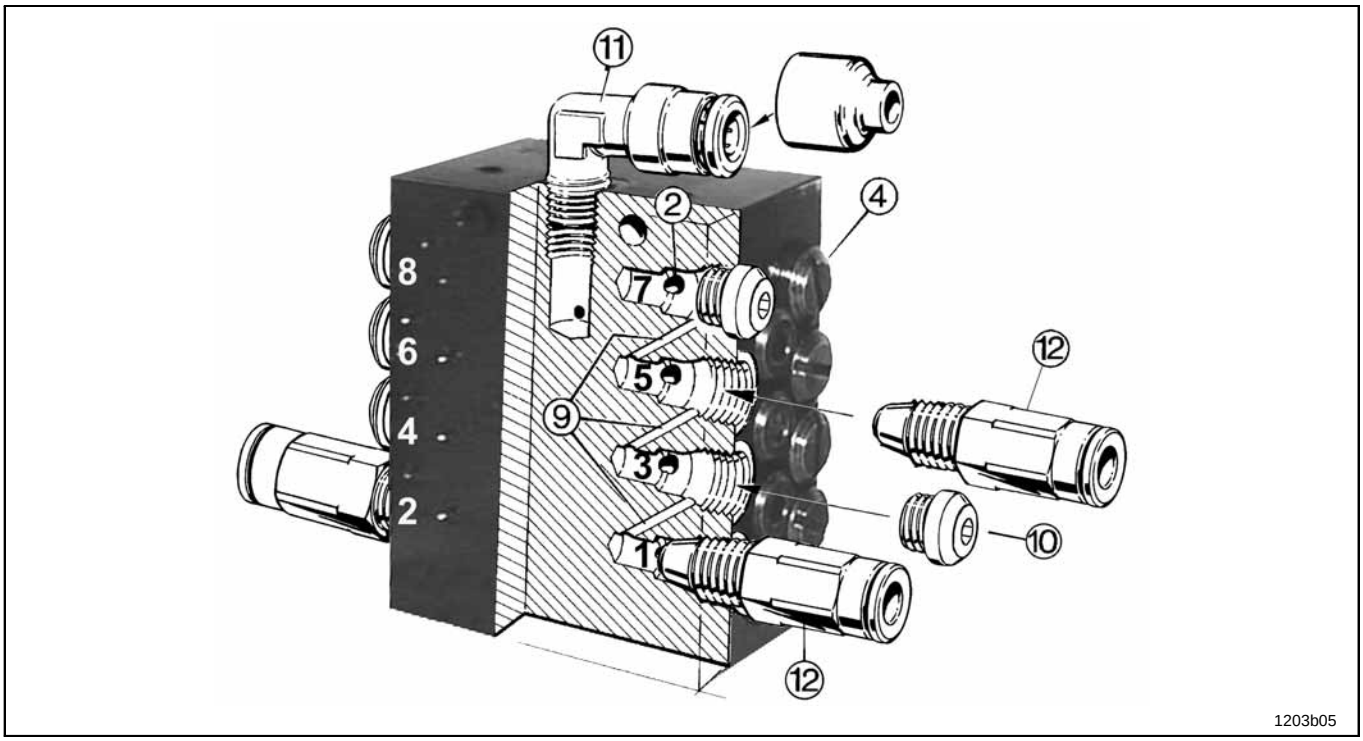

Fig. 27 Install the push-in type outlet fittings and the closure plugs in accordance with the dosage

2 -	Delivery hole of the metering piston and control piston	10 -	Closure plug with hex. socket head	12 -	Valve body assembly **Main metering device** - with reinforced collet **Secondary metering device** - with knurled collet
4 -	Closure plug (M11 x 1), piston (with chamfer)	11 -	Inlet fitting (optional with protection cap) [1]		
9 -	Junction channel		[1] when desired		

6001a02

NOTE

In the case of construction machines or agricultural machines use high-pressure hoses for the lubricant feed lines. In this case, secondary metering devices (see Fig. 27) must also be equipped with check valves with reinforced collet (standard flange, see page 6).

Single lubricant output

The simple lubricant output is the lubricant quantity dispensed by a pair of pistons (metering and control piston) per stroke and per outlet bore to one lubrication point (see page 33, Tab. 3).

Multiple lubricant outputs

Close one or more outlets to increase the output of the outlet below. Depending on the dosage (page 10, paragraph „Metering Screws“) several outputs add up (see fig. 28).

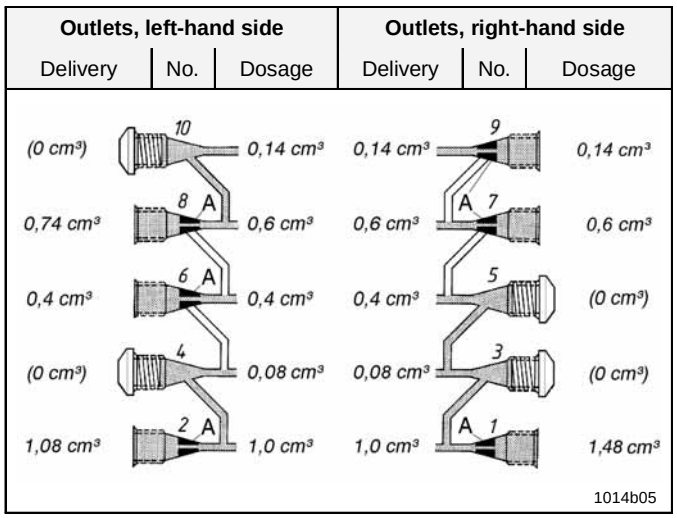

Fig. 28 Dosage of multiple outputs

A - clamping ring (brass)

Delivery 8 = dosage 10 + dosage 8

Delivery 2 = dosage 4 + dosage 2

Delivery 1 = dosage 5 + dosage 3 + dosage 1

LINCOLN GmbH & Co. KG • Postfach 1263 • D-69183 Walldorf • Tel +49 (6227) 33-0 • Fax +49 (6227) 33-259

Planning and Layout

Instructions for Quicklub Progressive Systems

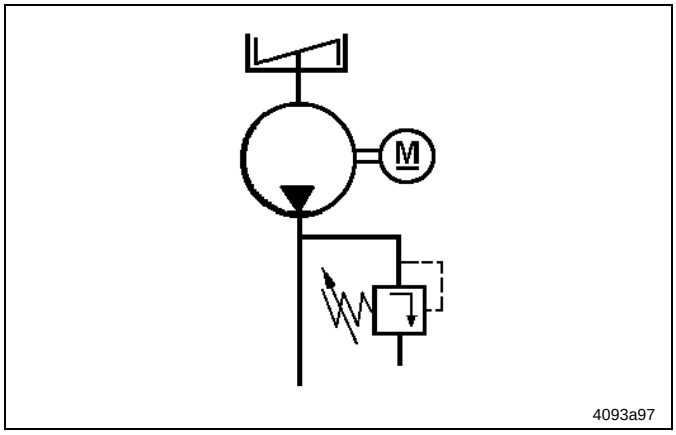

Fig. 29 Selecting the pumps

To achieve the appropriate planning and layout of a system, you should observe the following rules:

1. Selecting the pump

- Select the pump in accordance with its application and lubricant requirement:
  Pump 203 ..... 2L, 4L, 8L, 15L
  Pump 205 ..... 4L, 5L, 8L
  Pump 215 ..... 4L, 8L, 10L, 30L

Adhere to the supply voltage of the drive motor.

Select the printed circuit board or timer in accordance with the application. Note the application possibilities for the metering device monitoring.

- Protect the pump by means of an adequate pressure relief valve; see Parts Catalogs.

2. Determining the number of lubrication points to be connected

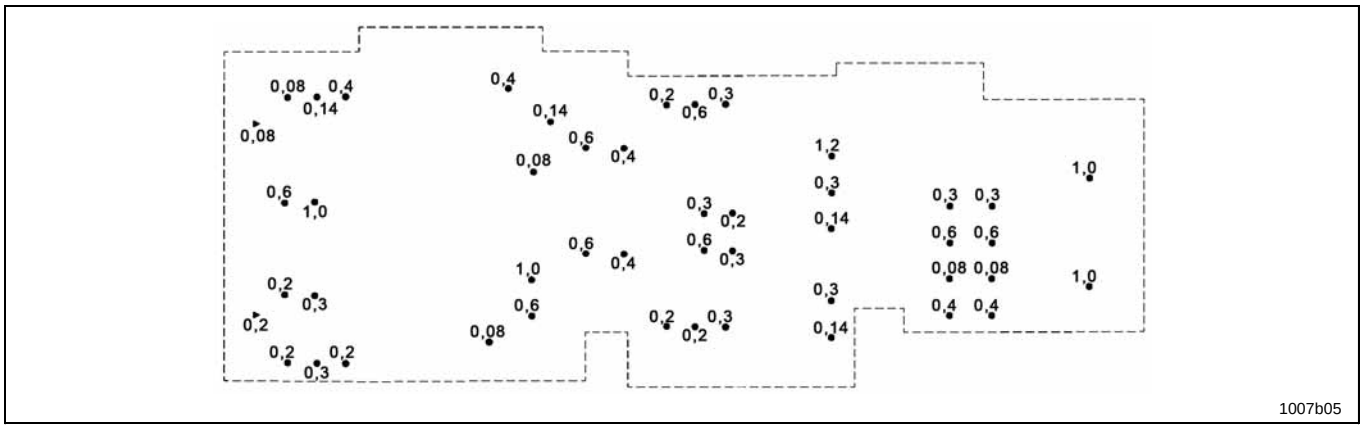

Fig. 30 Determining the number of lubrication points and their lubricant quantities

Exception: High-speed rotating parts. Also consider the lubrication points on auxiliary units or other superstructures.

3. Combining the lubrication points into groups

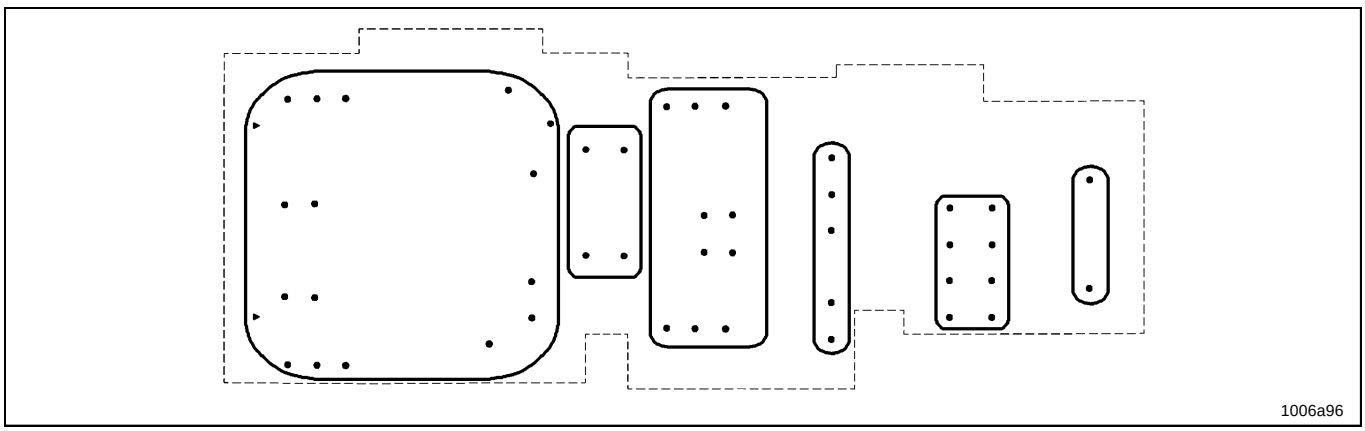

Fig. 31 Combining the lubrication points into groups

- A group should contain not more than 12 lubrication points, if possible fewer.
- If possible, also combine the lubrication points according to their lubricant requirement.
- If possible, allocate the lubrication points to standard SSV metering devices, or if necessary to SSV D metering devices.

LINCOLN GmbH & Co. KG • Postfach 1263 • D-69183 Walldorf • Tel +49 (6227) 33-0 • Fax +49 (6227) 33-259

Planning and Layout, continuation

Instructions for Quicklub Progressive Systems, continuation

4. Determining lubricant quantities of the individual lubrication points

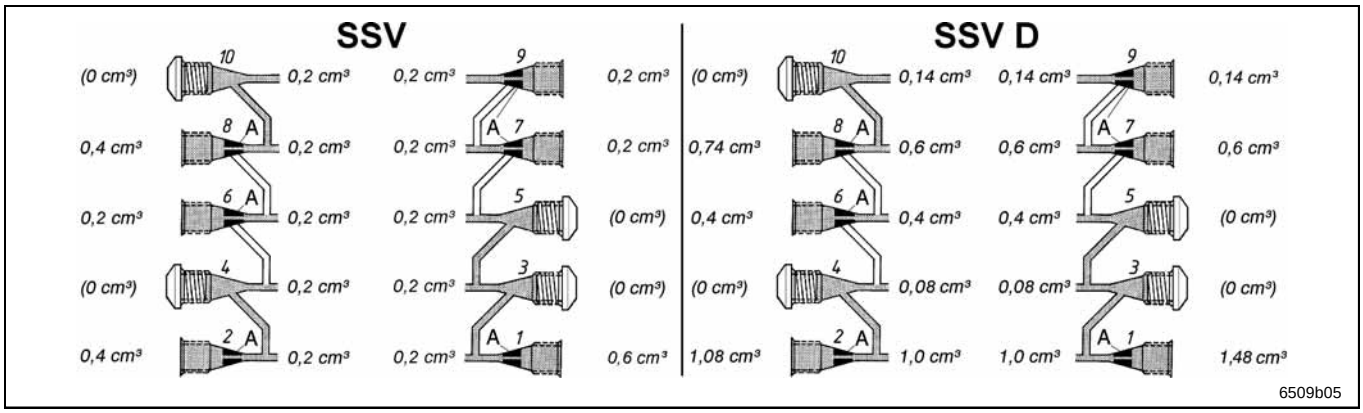

Fig. 32 Adapting the lubricant quantities

- Normally, lubricant quantities are determined and prescribed by the manufacturer of the machine according to the bearing load, the machine life and run time (operating conditions).
- The frequency of lubricant supply also depends on the grade of contamination and from the friction resistance of the bearing.
- As soon as lubricant quantity and lubrication frequency per lube point have been determined, the quantities are to be distributed to several metering devices with corresponding metering possibilities. These may be lubricant metering devices SSV or adjustable metering devices SSV D.

5. Additional increase of lubricant quantities with SSV D metering devices

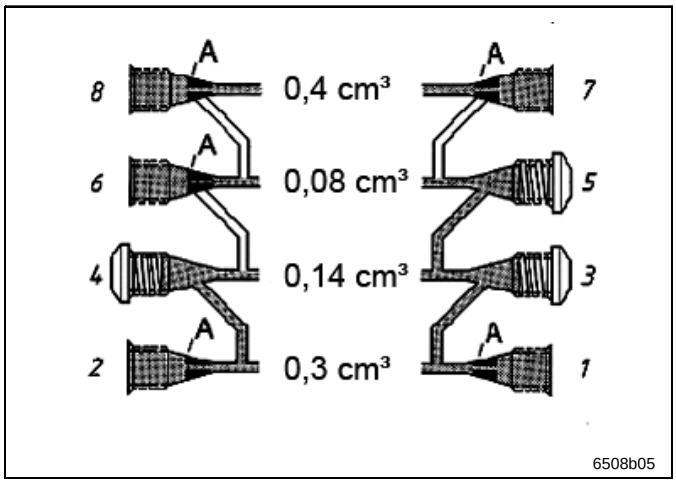

Fig. 33 Increase of lubricant quantities

Outlet quantities:

Outlet 7+ 8	= 0.4 cm³	Outlet 2	= 0.4 cm³
Outlet 6	= 0.08 cm³	Outlet 1	= 0.52 cm³

- If the lubricant requirement cannot be satisfied by a simple dosage per outlet, the lubricant quantity can be increased and adapt additionally by closing of outlets. Thereby the lubricant leaves the metering device through the next lower outlet on the same side.
  Optionally, outlets 1 and 2 can be bored with each other in order to dispose of the lubricant quantities of both outlets at one outlet. To do so, close outlet 1 or 2. In the case of metering devices **without bypass bore never close outlet 1 or 2!**
- For small bearing with or without sealing, we generally recommend small lubricant quantities.
  Larger unsealed bearings (length > 70 mm) or bearings with a very high load should receive the double or multiple lubricant quantity.

LINCOLN GmbH & Co. KG • Postfach 1263 • D-69183 Walldorf • Tel +49 (6227) 33-0 • Fax +49 (6227) 33-259

Planning and Layout, continuation

Instructions for Quicklub Progressive Systems, continuation

6. Allocating a metering device with the appropriate number of outlets to each group

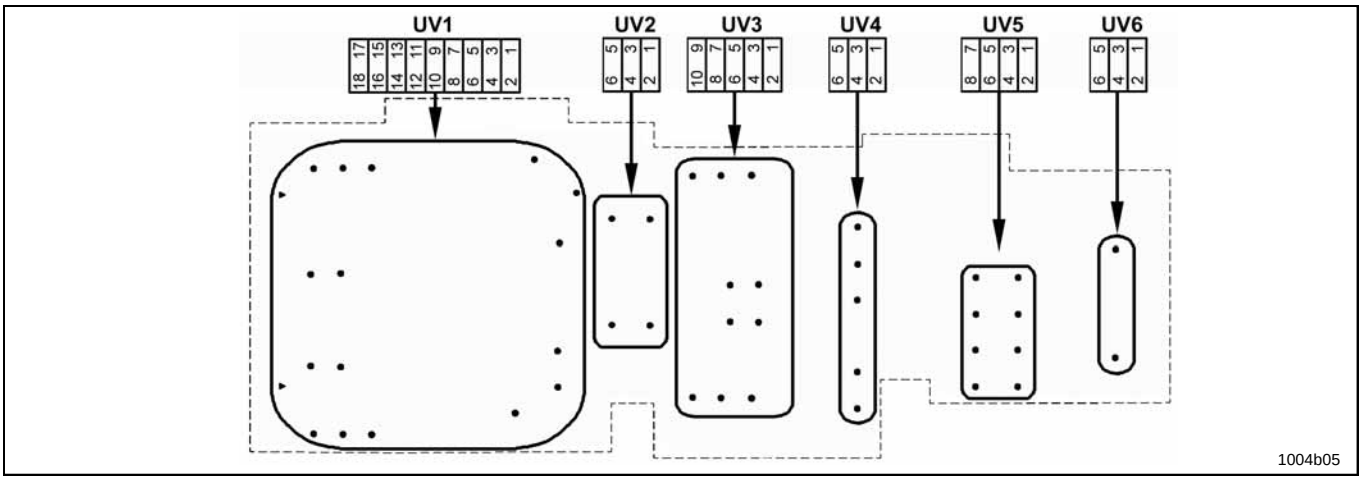

Fig. 34 Allocating the metering devices

- It is recommended that metering devices with 6, 8, 10, 12 to 22 outlets be used.
- In the case of a monitored system check where the metering device with preassembled piston detector or proximity switch shall be used (as a main metering device or as a secondary metering device). It is a precondition that each lube point receives lubricant at least once per day and operating cycle.

6001a02

NOTE

Generally, the piston detector is to be used on the secondary metering device that has the most outlets.
Should the construction sizes of the secondary metering devices differ much from each other, the piston detector is to be used with a metering device with a medium number of outlets.

7. Allocation of the required metering quantities of the SSV D

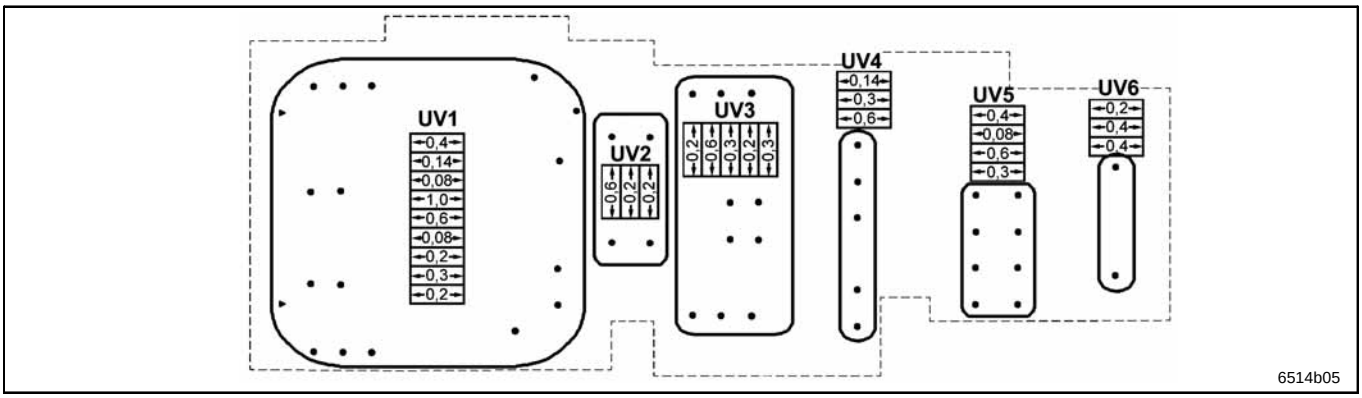

Fig. 35 Allocate metering device outlets to the lube points

- Allocate equal lubricant quantities to the corresponding metering screw(s) of the outlet of individual lube points.
- The number of all dosages in a group result in the construction size of a secondary metering device.
- In the case of an odd number of lube points, use a metering device with internal (see bypass metering device UV4, Fig. 37, page 26) or external combining of lubricant quantities (see page 17).

6001a02

NOTE

The smaller the division of metering quantities, the bigger the number of outlets and the easier the adaptation to the available lubricant quantities of the main metering device (see point 8 & 10).

- The SSV D is able to supply lubricant quantities from 0.08 to 1.8 cm³ per outlet and stroke without needing to combine lubricant quantities from various outlets.
- Example of an SSV: If the total lubricant requirement for 8 lube points is at 1.6 cm³, a lubricant metering device SSV 8 (8 outlets á 0.2 cm³) can be used.
- Example of an SSV D (see secondary metering device UV5, Fig. 37):
  If the total lubricant requirement for 8 lube points is between 0.64 cm³ and 14.4 cm³, an adjustable metering device starting from **SSV D 8** (8 outlets á 0.08 to 1.8 cm³) can be used.

LINCOLN GmbH & Co. KG • Postfach 1263 • D-69183 Walldorf • Tel +49 (6227) 33-0 • Fax +49 (6227) 33-259

Planning and Layout, continuation

Instructions for Quicklub Progressive Systems, continuation

8. Determining the size of the main metering device

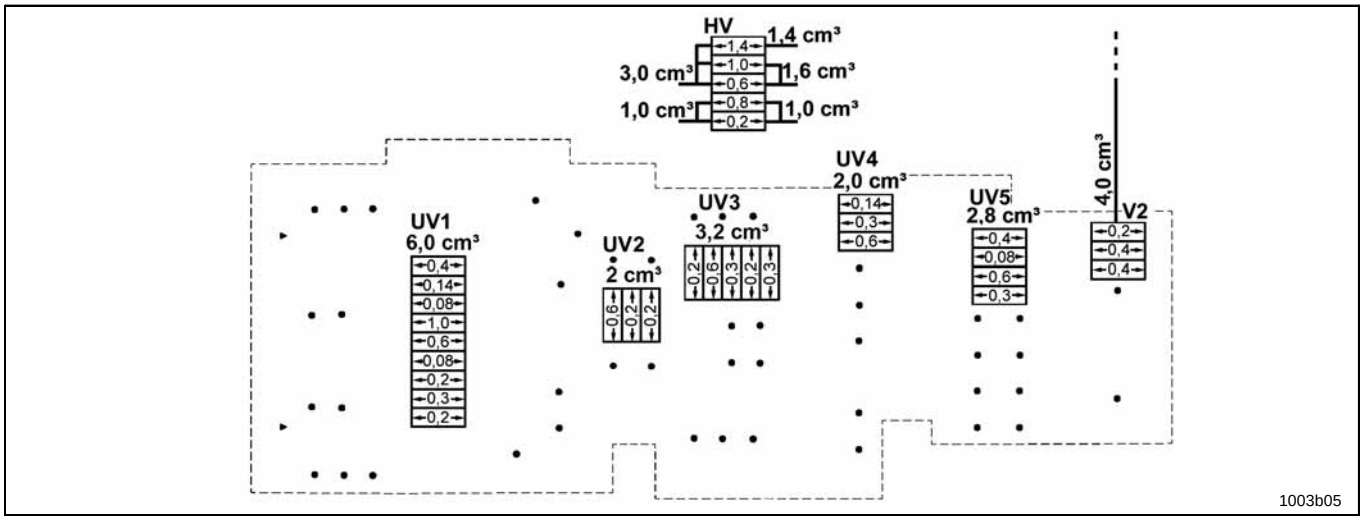

Fig. 36 Example for determining the size of the main metering device

Metering device:	UV1	UV2	UV3	UV4	UV5	V2
Secondary metering device (UV):						
Required lubricant quantity:	6.0 cm³	2.0 cm³	3.2 cm³	2.0 cm³	2.8 cm³	4.0 cm³
Division of metering quantity (see Fig. 36):	18 lube points	4 lube points	10 lube points	5 lube points	6 lube points	2 lube points
Main metering device (HV):						
Preselected lubricant quantity:	3.0 cm³	1.0 cm³	1.6 cm³	1.0 cm³	1.4 cm³	2.0 cm³
Combining of lubricant quantities:	1.4 + 1.0 + 0.6 cm³	0.8 + 0.2 cm³	1.0 + 0.6 cm³	0.8 + 0.2 cm³	1.4 cm³	2.0 cm³ [1)]

[1)] directly from the pump element

- First, allocate one outlet of the main metering device to each secondary metering device (UV).
- If possible, supply the same lubricant quantities to similar lubrication points.
- Check whether one or several lube points require larger lubricant quantities. As shown in Fig. 36, two lube points are provided with lubricant via one metering device V2. Due to the increase lubricant requirement, metering device V2 is connected directly to a pump element (output 2 cm³).
- If necessary, modify the allocation of the lubrication points.
- Maximum size of the main metering device (HV): SSV D 22.

- Compared to the output of the main metering device, the lubricant requirement of the secondary metering devices may be multiple. This requires the divisibility of the total lubricant requirement $\sum_{UV}$ by the lubricant requirement of the main metering device during one operating cycle S_{HV}. The result is the required number of complete cycles of the main metering device n_{HV} needed to cover the lubricant requirement of all its secondary metering devices.
- Example:
  - Lubricant requirement UV …… 16.0 cm³
    Lubricant quantity HV …….. 8.0 cm³

    $$\sum_{UV} / S_{HV} = n_{HV}$$

    $$16{,}0 cm^3 / 8{,}0 cm^3 = 2$$
  - Necessary cycles of the main metering device…... 2

LINCOLN GmbH & Co. KG • Postfach 1263 • D-69183 Walldorf • Tel +49 (6227) 33-0 • Fax +49 (6227) 33-259

Planning and Layout, continuation

Instructions for Quicklub Progressive Systems, continuation

9. Connecting the metering device outlets with the lubrication points to be connected

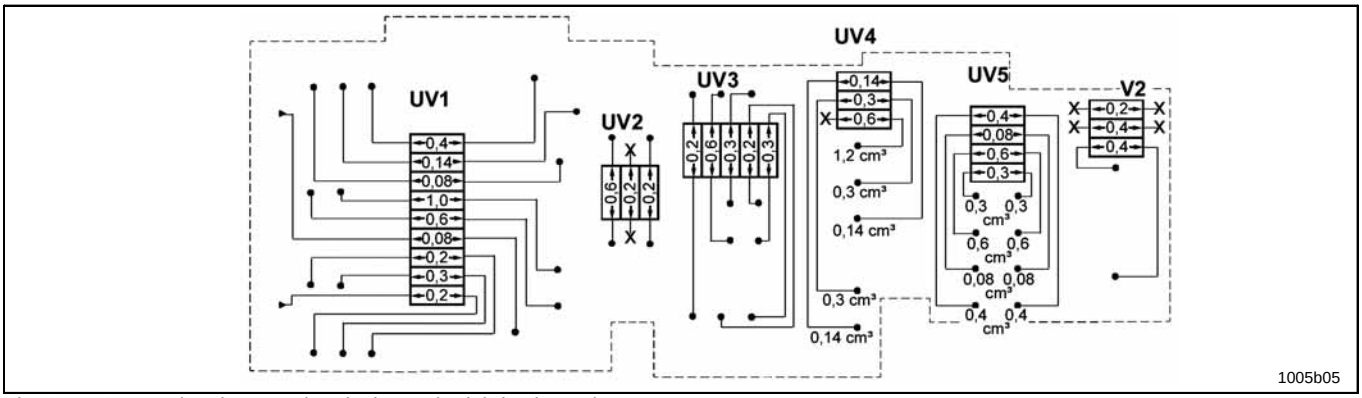

Fig. 37 Connecting the metering device to the lubrication points

6001a02

IMPORTANT

With standard metering devices SSV D 6 to SSV D 22 always connect outlets 1 and 2 to a lubrication point (example UV5, fig. 37).
In the case of the bypass metering devices SSV D 6/5 to SSV D 22/21 with cross-ported outlets 1 and 2 always connect outlet 1 or 2 to a lube point (example UV4, Fig. 37).

10. Distribution of Lubricant Quantities

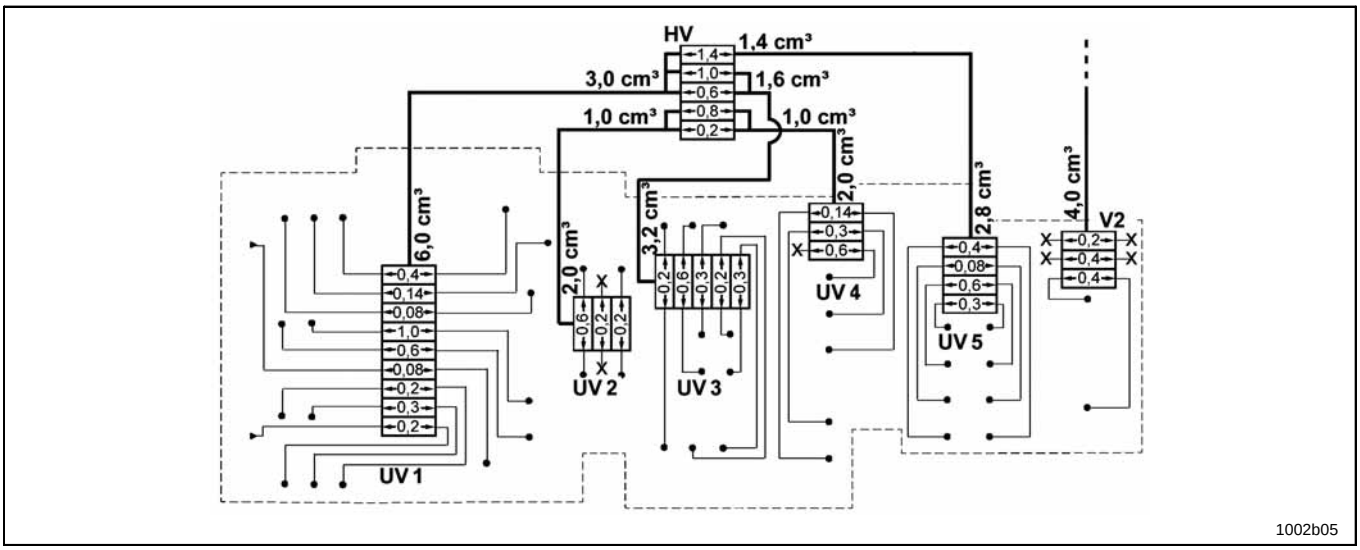

Fig. 38 Divided lubricant quantity

- The lubricant quantities are to be divided according to the above example.
- Each lubrication point should be supplied with lubricant at least once every day, at the latest on the next day (see step 12, page 27):
  - Avoid too much lubricant per day and per lubrication point (excessive lubrication).
  - Avoid too little lubricant per day and per lubrication point (poor lubrication).
- If it is not possible to fully share the lubricant quantities among the main metering device and its secondary metering devices, proceed according to the listed order:
  - Allocation of single lube points to a neighbor lubrication group (step 6, page 24).
  - Division of the lubricant quantities at the secondary metering device into smaller metering quantities in order to simplify the adaptation between main and secondary metering device (step 7, page 24).
  - Return of lubricant quantities that are not needed to the pump into the reservoir (not shown).
  - If necessary, small increases or reductions of the lubricant quantities on the lube points.
  - Adaptation of lube and pause times via the pump control unit in order to achieve even lubricant quantities per time unit.
    Set the pause time in such way that the frequency of the lubricant supply corresponds to the operating conditions of the machine or the vehicle (step 12, page 27).

LINCOLN GmbH & Co. KG • Postfach 1263 • D-69183 Walldorf • Tel +49 (6227) 33-0 • Fax +49 (6227) 33-259

Planning and Layout, continuation

Instructions for Quicklub Progressive Systems, continuation

11. Lubricant output of the pumps 203* and 205**

- at 100 bar backpressure
- at 20°C
- at 24 V rated voltage *

Pump element K5, B7 ..... **2 cm³/min*; 0.10 cm³/stroke ****
Pump element K6 ..... **2.8 cm³/min*; 0.15 cm³/stroke ****
Pump element K7 ..... **4 cm³/min*; 0.22 cm³/stroke ****
Adjustable pump element..... **0.04 – 0.18 cm³/stroke * ****

Lubricant output of the pump 215

- Max. number of outlets 15

Lubricant output per piston stroke:

Pump element piston dia. 6 mm ..... **0.16 cm³**
Pump element piston dia. 7 mm ..... **0.23 cm³**
Adjusting range..... **25% to 100%**

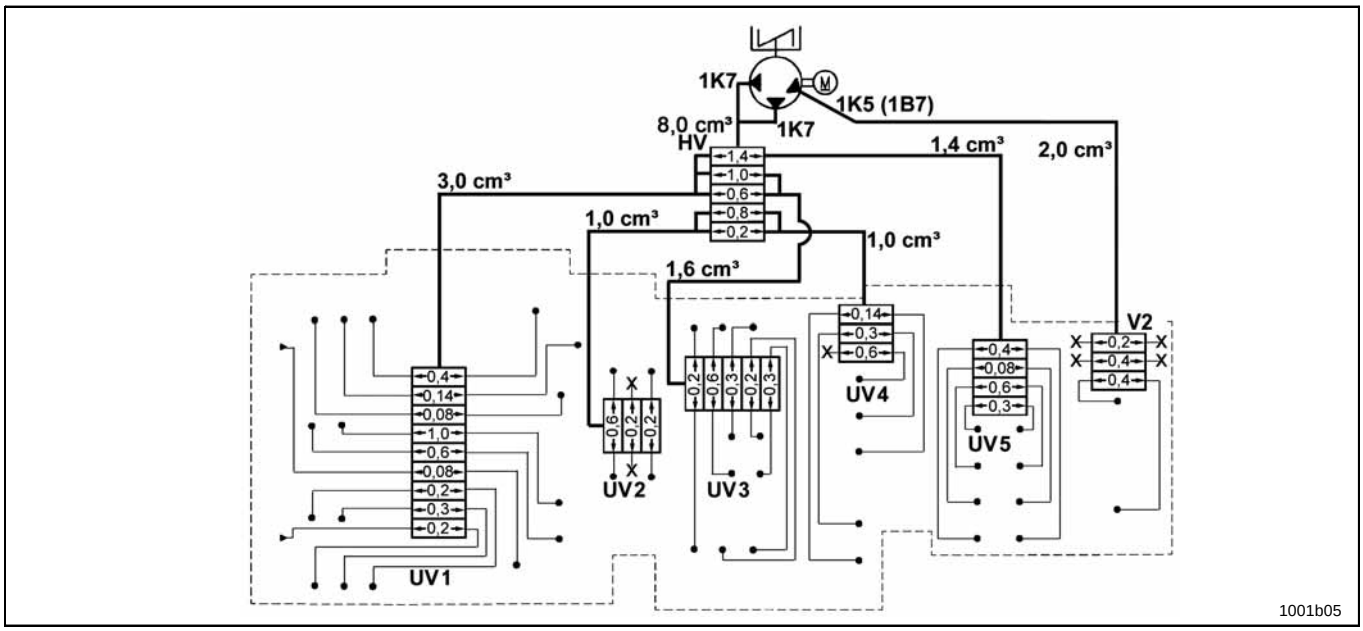

Fig. 39 Dividing the lubricant quantity

12. Adjusting the running time (operating time) of the pump (not for pumps 203 with microprocessor control)

- For the running time of a system select the time for the biggest secondary metering device, as a function of the main metering device used.
- If it is not possible to adjust a time parameter within the programmable scale, select the next higher value.
- During the lubricating time (pump running time) the used lubricant is renewed or topped up in the bearings.
- The frequency of renewal/topping up and the quantity which must be supplied to a single lubrication point depends on several factors, e.g.:
  - bearing size
  - kind of bearing - open or closed bearing, rolling bearing or friction bearing
  - frictional force
  - bearing loads
  - adjustable running times of the pump, etc.
- The required quantity may be very different as a result of the mentioned factors.

6001a02

IMPORTANT

Within a determined operating time of the machine or the vehicle, the lubricant at a friction point must have been renewed or topped up to that extent that no damages may occur.

If small, standard or large bearings are connected to secondary metering devices model SSV D, the lube points must be fed with the **premetered quantity** corresponding to the metering screw that is mounted.

LINCOLN GmbH & Co. KG • Postfach 1263 • D-69183 Walldorf • Tel +49 (6227) 33-0 • Fax +49 (6227) 33-259

Planning and Layout, continuation

Instructions for Quicklub Progressive Systems, continuation

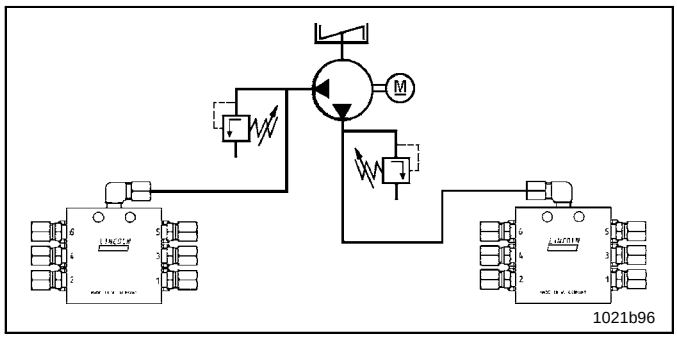

Fig. 40 System using two pump elements

13. Using a second pump element (2nd lubrication circuit)

- If the vehicle chassis or the machine is already equipped with a centralized lubrication system and if a superstructure (e.g. crane) or an auxiliary unit must be connected subsequently, this superstructure or auxiliary unit can be supplied from a specially installed pump element.

6001a02

IMPORTANT

Each pump element must be equipped with a pressure relief valve.

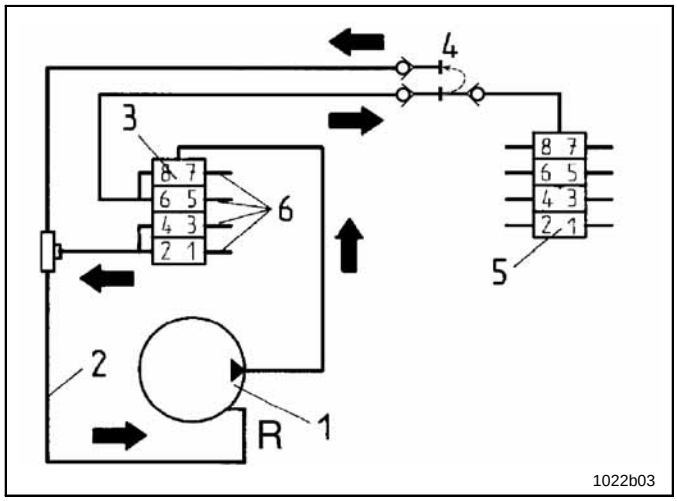

Fig. 41 Using a quick coupling with integrated return line

14. Using quick coupling

- For detachable bodies, e.g. loading cranes, use a detachable quick coupling with integrated return line.

6001a02

NOTE

*If instead of the quick coupling a simple coupling **(to be coupled under pressure)** is used, after disconnecting the body the feed line must be connected to a **return line** to the pump as otherwise **the system will block.***

1 - pump
2 - return line
3 - progressive metering device (main)
4 - clutch
5 - progressive metering device (secondary)
6 - lines to the secondary metering device

LINCOLN GmbH & Co. KG • Postfach 1263 • D-69183 Walldorf • Tel +49 (6227) 33-0 • Fax +49 (6227) 33-259

Planning and Layout, continuation

Instructions for Quicklub Progressive Systems, continuation

15. Max. line lengths

6001a02

IMPORTANT

The lubricant division should be made only via 2 steps of metering devices, i.e. ***main metering device - secondary metering device - lubrication point.***

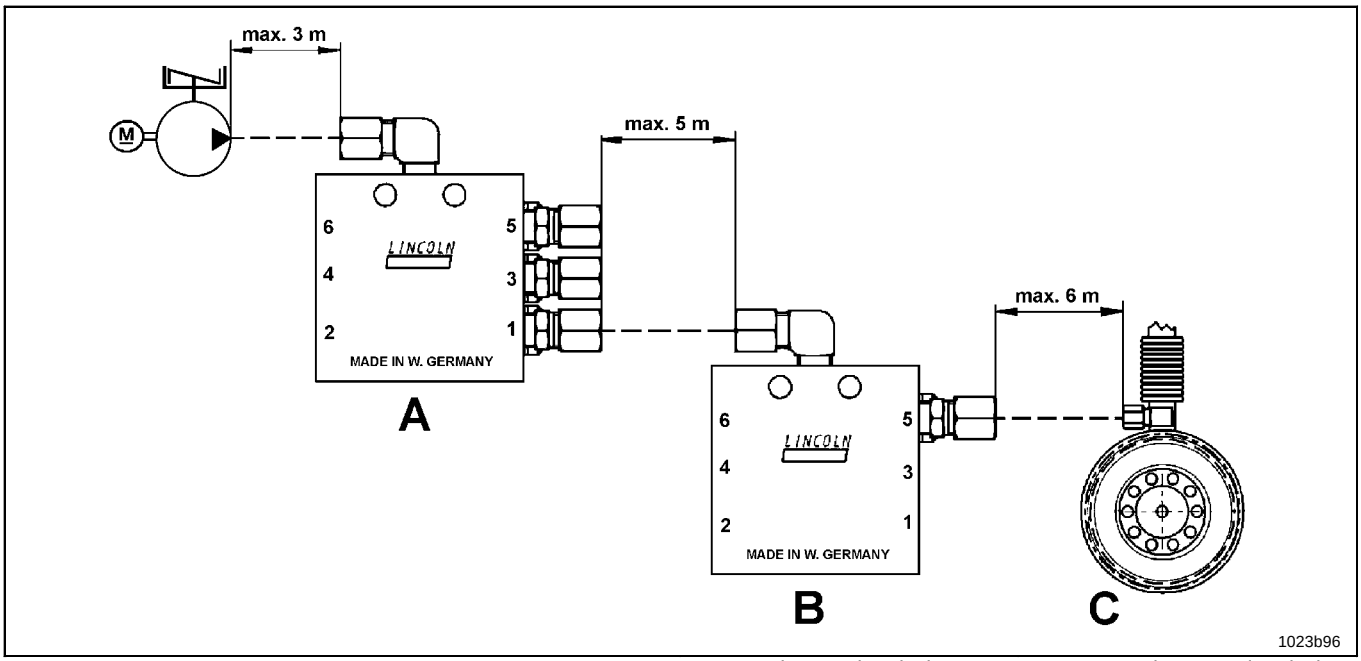

Fig. 42 Maximum line lengths

A - main metering device
B - secondary metering device
C - lubrication point

16. Pressure losses

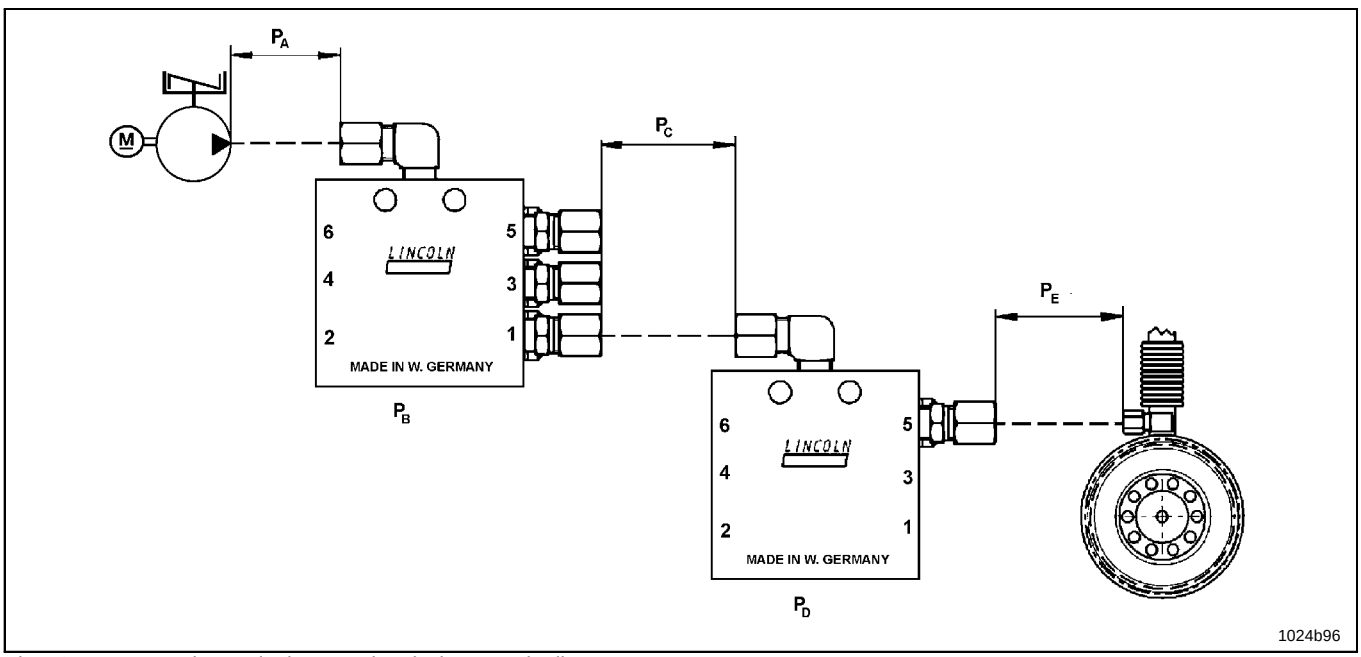

Fig. 43 Pressure losses in the metering devices or tube lines

P_A - Pressure loss, main line
P_B - Pressure loss, main metering device
P_C - Pressure loss, main line between main and secondary metering device
P_D- Pressure loss, secondary metering device
P_E - Pressure loss, lubricant feed line

LINCOLN GmbH & Co. KG • Postfach 1263 • D-69183 Walldorf • Tel +49 (6227) 33-0 • Fax +49 (6227) 33-259

Planning and Layout, continuation

Instructions for Quicklub Progressive Systems, continuation

The following chart serves as a reference when calculating the maximum size of a Quicklub system, under consideration of the lubricant sorts and ambient temperature:

	Maximum pressure loss with tube 6 x 1.5 mm (NW 3 mm)		
Lubricant penetration class			
Temperature	0° C	15° C	25° C
NLGI 0	5 bar/m	4 bar/m	2,5 bar/m
NLGI 1	8 bar/m	7 bar/m	5 bar/m
NLGI 2	12 bar/m	8 bar/m	6 bar/m
Maximum pressure loss through each SSV D 6 to SSV D 22			
NLGI 0	20 bar	15 bar	10 bar
NLGI 1	25 bar	20 bar	15 bar
NLGI 2	30 bar	25 bar	20 bar

Tab. 1 Maximum pressure loss

6001a02

NOTE

The data relating to the pressure loss per metering device refer to metering devices with 6 to 22 outlets, namely the main and secondary metering devices.

- The sum of all pressures, from PA to PE plus 5 bar for the rolling bearings (lubrication point) or plus 15 bar for friction bearings must not exceed 80% of the recommended working pressure of the pump.
- All the values mentioned in the tablet are average values based on real test results.
- The NLGI class of the grease only indicates the statistical density. It does not indicate the dynamic pumpability of the grease. The flow properties of greases of the same NLGI class may be very different.

LINCOLN GmbH & Co. KG • Postfach 1263 • D-69183 Walldorf • Tel +49 (6227) 33-0 • Fax +49 (6227) 33-259

Troubleshooting

Fault: Blockage in the downstream progressive system

Cause:

- Bearing, lines or metering device clogged
- In the case of the standard metering devices SSV D 6 to SSV D 22 the outlet boreholes 1 or 2 are closed.

The fault can be identified by:

a) grease leaking at the pressure relief valve.
b) the fact that the indicator pins installed on the metering devices (if any) no longer move.
c) the fault signal of the signal lamp (if any) or LED display

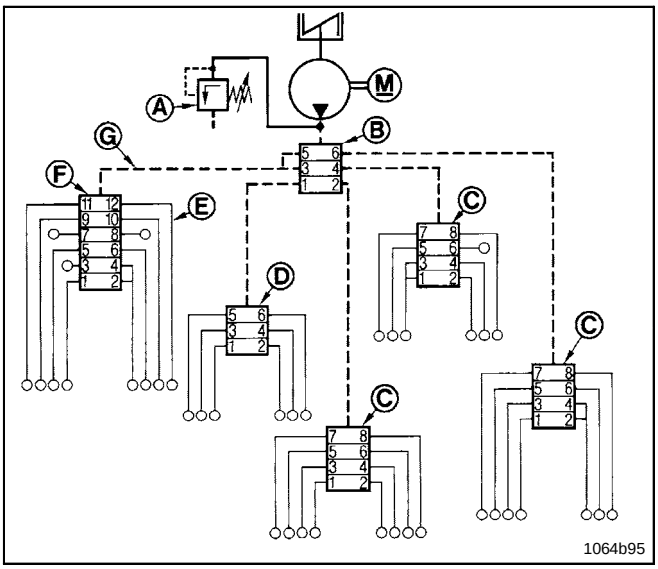

Fig. 44 Example of a lubrication system

A -	pressure relief valve	E -	Pressure plastic tubes
B -	main metering device	F -	Secondary metering device SSV 12
C -	secondary metering device SSV 8		
D -	secondary metering device SSV 6	G -	High-pressure hose

Correction:

➲ Find out which is the cause of the blockage and rectify it in accordance with he following example.

➲ Allow pump to run (see ”To trigger an additional lubrication cycle”).

➲ Loosen all main line connections (pos. G) one after the other from the main metering device (B, Fig. 44) leading to the secondary metering devices. If f. ex. grease or oil emerges under pressure from outlet 1 of main metering device (pos. B), the blockage will be found in the lubrication circuit of the secondary metering device (pos. D).

6001a02

IMPORTANT

If there is a blockage in the downstream system, the main lines are under pressure. In such a case, it is difficult to detach the push-in type connecting parts of the main line. Relieve the system by removing the closure plug on the push-in type pressure relief valve valve or, if any, by removing the filling nipple.

➲ Let the pump run.

➲ Disconnect all lubricant feed lines E from secondary metering device D one after the other. If f. ex. grease or oil emerges under pressure from outlet 3 of metering device D, the blockage will be found in the line of outlet 3 or in the connected bearing.

➲ Pump the blocked bearing or line through by means of a manual pump.

6001a02

NOTE

When checking the individual outlets, keep each outlet loosened for quite a while because per each motor revolution there is only one piston stroke. A complete cycle of all metering devices requires several strokes.

➲ Check pressure relief valve (pos. A). Replace it, if necessary.

Tab. 2 Troubleshooting (continuation next page)

LINCOLN GmbH & Co. KG • Postfach 1263 • D-69183 Walldorf • Tel +49 (6227) 33-0 • Fax +49 (6227) 33-259

Troubleshooting, continuation

Fault: Blockage in the downstream progressive system, continuation	
Cause:	**Correction:**
· Metering device blocked	➲ Thoroughly rinse metering device with a manual pump. ➲ If not possible, replace the metering device. ➲ Remove all tube fittings.  6001a02 **IMPORTANT** *The control pistons are fit into the metering device bores. They must not be mixed up.*

Fault: Differing lubricant amounts at the lubrication points	
Cause:	**Correction:**
· Lubricant metering not correct	➲ Check the lubricant metering acc. to the lubrication chart.
· Setting of the pause time or operating time incorrect	➲ Check the time setting.

Fault: Excessive or poor lubrication of the lubrication points	
Cause:	**Correction:**
· Setting of the operating time or pause time incorrect	➲ Check the time setting at the control devices, printed circuit boards or control units.

Tab. 2 Troubleshooting

Selection Guide

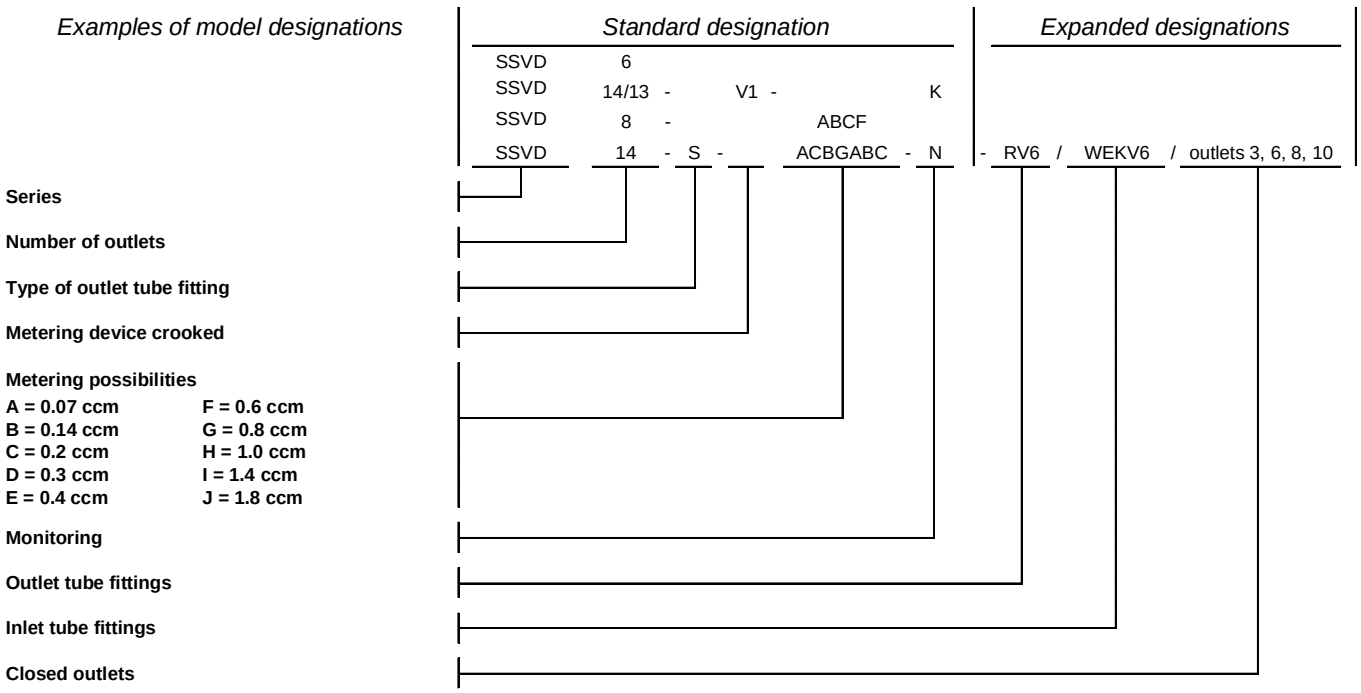

LINCOLN GmbH & Co. KG • Postfach 1263 • D-69183 Walldorf • Tel +49 (6227) 33-0 • Fax +49 (6227) 33-259

Technical Data

Metering device

Metering device model SSV D

Lubricant output per outlet and per stroke, code A.... 0.08 cm³
Lubricant output per outlet and per stroke, code B.... 0.14 cm³
Lubricant output per outlet and per stroke, code C..... 0.2 cm³
Lubricant output per outlet and per stroke, code D..... 0.3 cm³
Lubricant output per outlet and per stroke, code E..... 0.4 cm³
Lubricant output per outlet and per stroke, code F..... 0.6 cm³
Lubricant output per outlet and per stroke, code G ..... 0.8 cm³
Lubricant output per outlet and per stroke, code H..... 1.0 cm³
Lubricant output per outlet and per stroke, code I ..... 1.4 cm³
Lubricant output per outlet and per stroke, code J ..... 1.8 cm³
Max. operating pressure ..... 350 bar
Max. starting pressure ..... 20 bar
Max. differential pressure
between two outlets ..... 100 bar
Outlet connection for tube ..... ø 4 and 6 mm
Inlet connection ..... G 1/8
Outlet connection ..... M 10 x 1
Operating temperature ..... - 25 °C to + 70 °C

Push-in Type Tube Fittings

High-pressure range, p_{max} ..... 350 bar
Inlet tube fittings of the metering devices
Outlet fittings, main metering device
Low-pressure range, p_{max} ..... 250 bar
Outlet fittings, secondary metering devices
Inlet fittings to the lubrication point

Lines

Main Line (NW 4.1 x 2.3 mm)

Min. bursting pressure
(in connection with hose clamp, screwed). ..... 600 bar
Min. bending radius ..... 35 mm
Min. temperature ..... - 40° C

Pressure plastic tube (ø 6 x 1.5 mm)

Min. bending radius ..... 50 mm
Bursting pressure at 20° C ..... approx. 210 bar
Min. temperature..... - 40° C

Tightening Torques

Metering Devices

Closure plug (piston) in metering device .....18 Nm
Closure plug (outlets) in metering device .....15 Nm
Inlet fitting in metering device
- screw type .....17 Nm
- push-in type .....10 Nm
Outlet fitting in metering device
- screw type .....17 Nm
- push-in type ..... 12 Nm
Compression nut onto outlet fitting, screw-type
- plastic tube..... 10 Nm
- steel tube .....11 Nm
Control pin in metering device .....12 Nm
Piston detector in metering device .....15 Nm
KN - switch on metering device .....18 Nm
Install metering device
- dry ..... 10 Nm
- oiled ..... 7.5 Nm
Metering screw in metering device ..... 8 Nm

Metering Screws

The following table shows all available metering screws with their respective metering quantities and lengths:

Stamp / Code	Metering quantity	Length of metering screw	Part N°.		
			Piece		Piece/type
08 / A	0.08 cm³	46.7 mm	12	549-34254-1	↓
14 / B	0.14 cm³	45.9 mm	12	549-34254-2	↓
20 / C	0.20 cm³	44.7 mm	12	549-34254-3	↓
30 / D	0.30 cm³	42.7 mm	12	549-34254-4	↓
40 / E	0.40 cm³	407 mm	12	549-34254-5	↓
60 / F	0.60 cm³	36.7 mm	12	549-34254-6	↓
80 / G	0.80 cm³	32.7 mm	12	549-34254-7	↓
100 / H	1.00 cm³	28.7 mm	12	549-34254-8	↓
140 / I	1.40 cm³	20.8 mm	12	549-34254-9	↓
180 / J	1.80 cm³	12.8 mm	12	549-34255-1	↓
08-180 / A-J	0.08 cm³ - 1.80 cm³	12.8 mm – 46.7 mm	20	549-34255-2	per 2

Tab. 3 Set of metering screws

LINCOLN GmbH & Co. KG • Postfach 1263 • D-69183 Walldorf • Tel +49 (6227) 33-0 • Fax +49 (6227) 33-259

Technical Data, continuation

Dimensions

Metering device model SSV D 6 to SSV D 22

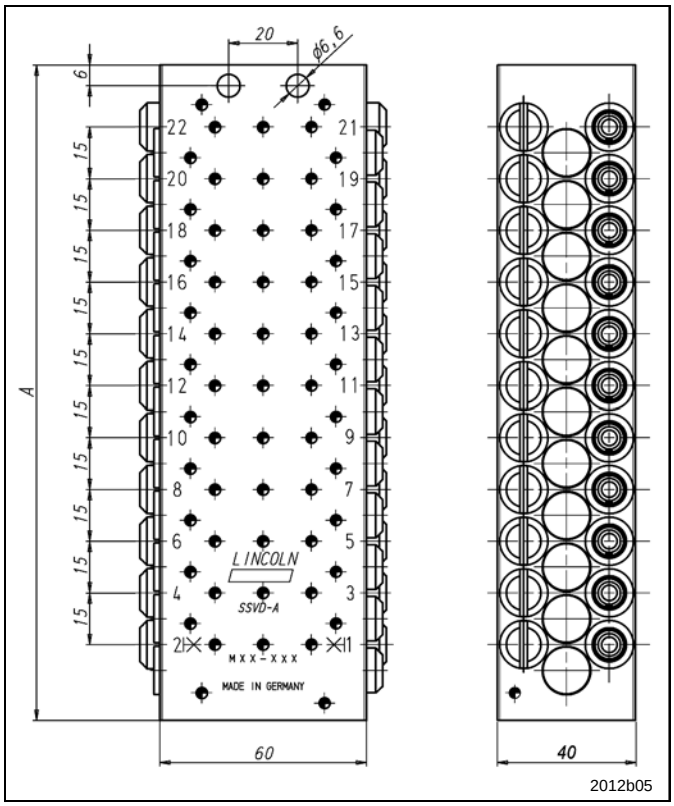

SSV model	Dimensions A in mm
6	70
8	85
10	100
12	115
14	130
16	145
18	160
20	175
22	190

Fig. 45 Metering device model SSV D 6 to D 22

LINCOLN GmbH & Co. KG • Postfach 1263 • D-69183 Walldorf • Tel +49 (6227) 33-0 • Fax +49 (6227) 33-259

Applications

Multi-line and Progressive System

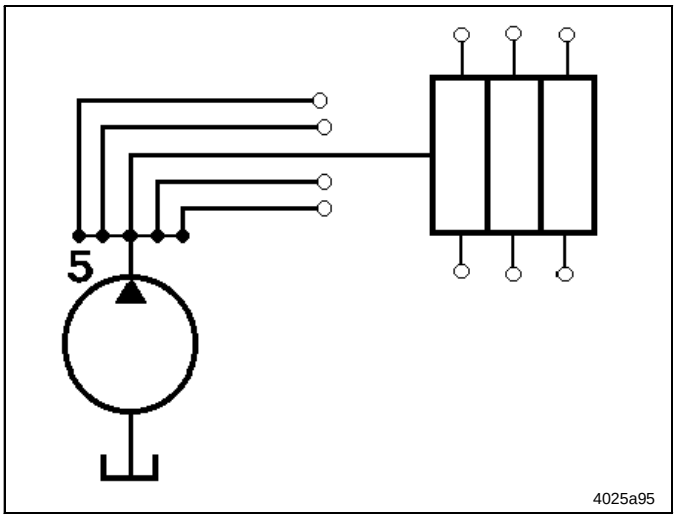

Fig. 46 Multi-line pump expanded by a progressive metering device

Extensibilities of Multi-line and Progressive Systems

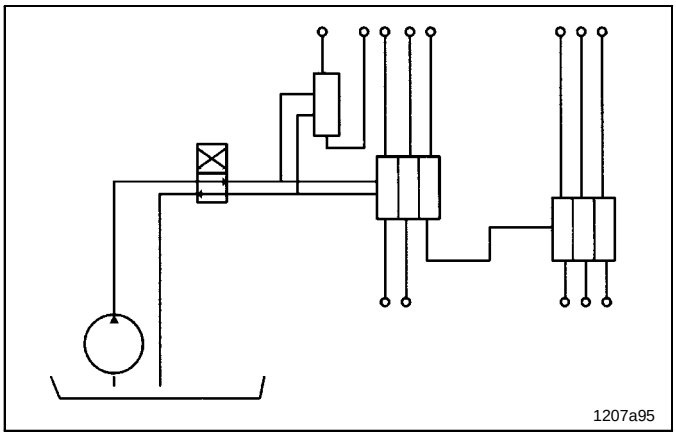

Fig. 47 Two-line system expanded by a progressive metering device

- Progressive metering devices can be used in two-line or single-line centralized lubrication systems in order to increase the number of outlets of multi-line pumps or to subdivide the single metering devices and measuring valves (fig. 46 to 50) also as secondary metering devices in large and small oil circulating systems.

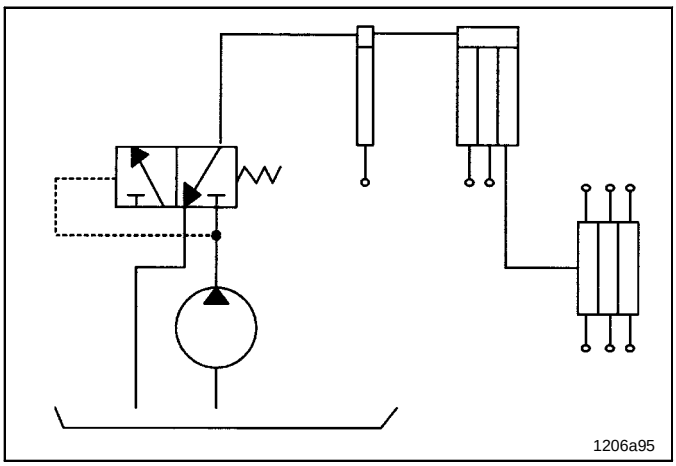

Fig. 48 Single-line system expanded by a progressive metering device

LINCOLN GmbH & Co. KG • Postfach 1263 • D-69183 Walldorf • Tel +49 (6227) 33-0 • Fax +49 (6227) 33-259

Applications, continuation

Single-nipple System; BDS (Bearing Dosage System)

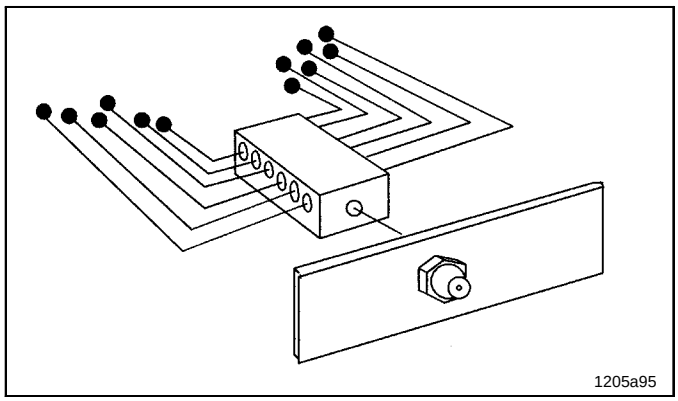

Fig. 49 Central lubrication point (single nipple)

- Quicklub progressive metering devices offer the option of cross-porting several lubrication points on a machine to one or more central lubrication points, as shown in fig. 49 which illustrates this basic feature.

Extensibilities of the lubrication system

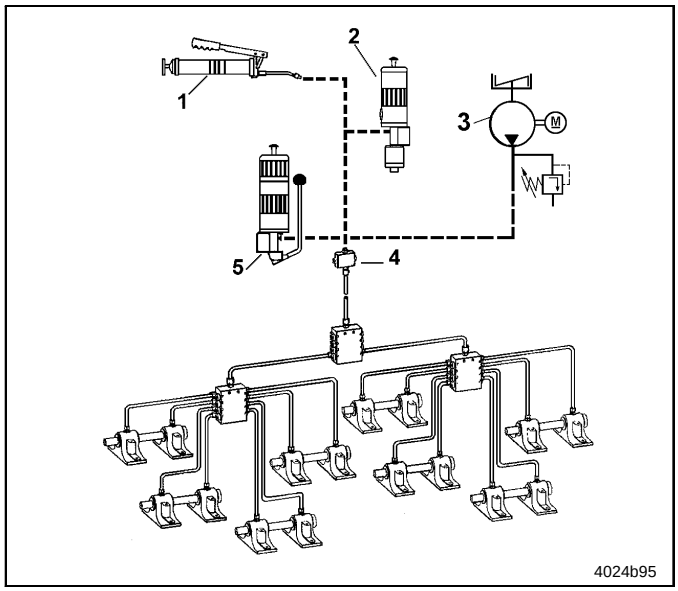

Fig. 50 Possible pump connections

1 - Hand-operated pump
2 - Pneumatically operated pump
3 - Electrically operated pump
4 - Lubrication fitting block
5 - Hand-operated filling pump

- In combination with manual, pneumatical or electrical pumps, progressive metering devices provide simple centralized lubrication systems at a favorable price (see Fig. 50). When used with integrated control units, these centralized lubrication systems can be operated also automatically.

LINCOLN GmbH & Co. KG • Postfach 1263 • D-69183 Walldorf • Tel +49 (6227) 33-0 • Fax +49 (6227) 33-259

Lincoln List of Lubricants

6001a02

IMPORTANT

Absolute cleanness is essential when handling lubricants. Impurities will remain suspended in the lubricant and cannot settle. This will result in damage to the lubrication system and thus to the bearing.

The Quicklub pump can dispense commercial greases up to NLGI grade 2 or mineral oils of at least 40 mm²/s (cST) at operating temperature.

The **proven lubricants** (see following tables) have been tested by us with regard to their transportability and bleeding behavior. We can recommend them for an application up to the indicated **minimum delivery temperature** in Quicklub lubrication systems by Lincoln& Co. KG. During the tests these lubricants did not cause any damage due to incompatibility with the material used by us. The composition of the lubricants, their behavior during the transport and their compatibility with other material are not known to us.

The lubricants we recommend on the basis of the manufacturer's data sheet (see following tables) can be used in our lubrication systems up to the indicated **minimum delivery temperature**.

Lubricant recipes may change. In case of doubt, send your request for more information to the manufacturer of the centralized lubrication system. This refers in particular to lubricants with more than 3% graphite that are transportable in lubrication systems only conditionally.
The lubricants released by us have not been tested with regard to their long-term behavior.

6001a02

IMPORTANT

The manufacturer of the centralized lubrication system can accept no liability for:
- *damages due to the use of greases that are not or only conditionally transportable in centralized lubrication systems.*
- *damages on parts of the centralized lubrication system caused by chemical or biological changes of the lubricant used.*
- *damages due to the incompatibility with other materials.*

The liability is limited to transportable lubricants in centralized lubrication systems.

6001a02

IMPORTANT

Use lubricants with solid matter additives only after having consulted the manufacturer of the system!

Proven lubricants

Manufacturer	Designation	Thickener	Min. delivery temperature
AGIP AUTOL	Universal grease	Li-12-OH-stearat	-15 °C
ARAL	Long-term grease H	Li-12-OH-stearat	-15 °C
AUTOL	Top 2000	Ca-complex	-10 °C
AUTOL	Top 2000 W	Ca-complex	-20 °C
BP	C1 Multipurpose grease	Ca	-20 °C
BOSCH-REXROTH	Dynalub 510	Li	-15 °C
BOSCH-REXROTH	Dynalub 520	Li	-20 °C
ELKALUB	GLS 135/N2	Li	-15 °C
FUCHS-LUBRITECH	Stabil Eco EP2	Li/Ca	-25 °C
FUCHS	Renocal FN 745	Ca-12-OH-stearat	-25 °C
FUCHS	Renocal FN3	Ca	-20 °C
FUCHS	Renolit LZR 2 H	Li	-20 °C
FUCHS	Renolit HLT 2	Li	-25 °C
MOBIL	Mobilith SHC 100	Li-complex	-25 °C
MOLYKOTE	TTF 52	inorganic thickener	-30 °C
OPTIMOL	Longtime PD 2	Li-12-OH-stearat	-20 °C
OPTIMOL	Olit CLS	Li/Ca	-15 °C
RHENUS	Norlith KSP 2	Li + Li-12-OH stearat	-15 °C
RHENUS	Norlith MZN 2	Li	-15 °C
SHELL	Retinax EPL 2	Li-12-OH-stearat	-10 °C
SHELL	Retinax CSZ	Li/Ca	-35 °C
WESTFALEN	Gresalit ZSA 2	Li-12-OH-stearat	-15 °C

LINCOLN GmbH & Co. KG • Postfach 1263 • D-69183 Walldorf • Tel +49 (6227) 33-0 • Fax +49 (6227) 33-259

Lincoln List of Lubricants, continuation

6001a02

IMPORTANT

Use lubricants with solid matter additives only after having consulted the manufacturer of the system!

Lubricant recommendations based on the manufacturer's data sheet

Manufacturer	Designation	Thickener	Min. delivery temperature
AGIP	F1 Grease 24	Ca	-15 °C
ARAL	Multipurpose grease	Li-12-OH-stearat	-15 °C
ARAL	Multipurpose grease ZS 1/2	Li/Ca	-20 °C
AVIA	Avialith 2 EP	Li-12-OH-stearat	-15 °C
BP	Energrease LC 2	Li-complex	-15 to -10 °C
BP	Energrease MP-MG 2	Ca-complex	-5 °C
CASTROL / TRIBOL	Molub Alloy 6780	Li-12-OH-stearat	-30 to -25 °C
CASTROL	CLS - Grease	Li/Ca	-25 °C
CASTROL	Olista Longtime 2	Li	-20 ° C
CASTROL	Optimol Olit 2 EP	Li	-20 °C
DEA	Glissando 20	Li-12-OH-stearat	-15 to -10 °C
ESSO	Ronex Extra Duty 2	Li-complex	5 °C
ESSO	Ronex MP2	Li-complex	-5 °C
ESSO	Beacon EP2	Li	-5 °C
ESSO	Cazar K2	Ca	-15 °C
FIAT LUBRIFICANTI	Comar 2	Li	-25 °C
KLÜBER	Centoplex 1 DL	Li/Ca	-20 °C
KLÜBER	Isoflex NBU 15	Ba	-25 °C
KLÜBER	Klüberplex BEM 34-132	Ca-complex	-20 °C
KLUEBER	Klüberplex BEM 41-141	Li-complex	-25° C
KLÜBER	Petamo GHY 133 N	Polycarbamide	-15 °C
MOBIL	Mobilgrease XHP 221	Li-complex	-10 °C
MOBIL	Mobilgrease XHP 461	Li-complex	-10 °C
MOBIL	Mobilgrease XHP 222	Li-complex	-5 °C
MOBIL	Mobilith SHC 220	Li-complex	-20 °C
SHELL	Alvania EP(LF) 1	Li-12-OH-stearat	-15°C +/- 5°C
SHELL	Alvania EP(LF) 2	Li-12-OH-stearat	-10°C +/- 5°C
SHELL	Alvania RL2	Li-12-OH-stearat	-15°C +/- 5°C
SHELL	Malleus GL	Gel	GL205 -20 °C, GL300 -10 °C GL400 0 °C, GL500 +5 °C
SHELL	Retinax CS	Li	-20 °C
SHELL	Retinax LX 2	Li	-5°C +/- 5°C
SHELL	Retinax HDX 2	Li/Ca	-10°C +/- 5°C
TEXACO	Premium RB	Li	-20 °C
TOTAL	Ceran AD	Ca-complex	- 15° C
TOTAL	Ceran LT	Ca-complex	-20 °C
TOTAL	Ceran WR2	Ca-complex	-10 °C
ZELLER & GMELIN	Divinol Lithogrease G 421	Li-complex	-15 °C

LINCOLN GmbH & Co. KG • Postfach 1263 • D-69183 Walldorf • Tel +49 (6227) 33-0 • Fax +49 (6227) 33-259

Lincoln List of Lubricants, continuation

6001a02

IMPORTANT

Use lubricants with solid matter additives only after having consulted the manufacturer of the system!

Biodegradable lubricants

Proven lubricants:

Manufacturer	Designation	Thickener	min. delivery temperature
ARAL	Aralub BAB EP 2	Li/Ca	-25 °C
BP	Biogrease EP 2	Li/Ca	-25 °C
FUCHS-LUBRITECH	Stabyl ECO EP 2	Li/Ca	-25 °C

Lubricant recommendations based on the manufacturer's data sheet:

Manufacturer	Designation	Thickener	min. delivery temperature
AUTOL	Top Bio 2000	Ca	-25 °C
AVIA	Biogrease 1	Li	up to 0 °C
DEA	Dolon E 2	Li	-15 °C
FUCHS	Plantogel 2 S	Li/Ca	-15 °C
KLÜBER	Klüberbio M72-82	Polycarbamide	-20 °C

Lubricants for the food & beverage industry

Lubricant recommendations based on the manufacturer's data sheet:

Manufacturer	Designation	Thickener	min. delivery temperature
ARAL EURAL	Grease EPF 2	Al-complex	-5°C
BREMER & LEGUIL	Rivolta F.L.G 4 – 2	Al-complex	-20 °C
ELKALUB	GLS 364	organic thickener	-10 °C
ELKALUB	GLS 367/N2	inorganic thickener	-5°C
ELKALUB	GLS 380/N1	Al-complex	-10 °C
ELKALUB	GLS 380/N2	Al-complex	-5°C
FUCHS	Renolit G 7 FG 1	Bentonite	-5°C
FUCHS-LUBRITECH	Gleitmo 585 M (KTW-drinking water release)	Li	-10 °C
INTERFLON	Fin Food Grease EP	Al-complex	-5°C
KLUEBER	Paraliq GA 343	Al-complex	-10 °C
KLUEBER	Kluebersynth UH1 14-151	Al-complex	-20 °C
MOBIL	Mobilgrease FM 462	Al-complex	-15 °C
Nordischer Maschinenbau BAADER	Special grease GLS 380/N3	Al-complex	-5°C
OKS	470	Li-12-OH-stearat	-15 °C
OPTIMOL	Obeen UF 1	Al-complex	-15 °C
OPTIMOL	Obeen UF 2	Al-complex	-10 °C
RHENUS NORPLEX	AFD 2	Al-complex	-5°C
RHENUS NORPLEX	AFP 2	Al-complex	-5°C
RHENUS NORPLEX	AFS 2	Al-complex	-25 °C
RHENUS NORPLEX	AFW 2	Al-complex	-5°C
SHELL	Cassida Grease EPS 1	Al-complex	-15 °C
SHELL	Cassida Grease EPS 2	Al-complex	-10 °C
TOTAL	Lubriplate FGL 2	Al-complex	-5°C
TRIBOL MOLUB-ALLOY	FoodProof 823-2 FM	Al-complex	-15 °C
TRIBOL MOLUB-ALLOY	9830 high-temperature grease	PTFE	0°C

LINCOLN GmbH & Co. KG • Postfach 1263 • D-69183 Walldorf • Tel +49 (6227) 33-0 • Fax +49 (6227) 33-259

America:	Europe/Africa:	Asia/Pacific:	
Lincoln Industrial	Lincoln GmbH & Co. KG	Lincoln Industrial Corporation	
One Lincoln Way	Heinrich-Hertz Straße 2-8	51 Changi Business Park Central 2	
St. Louis, MO 63120-1578	69190 Walldorf, Germany	# 09-06 The Signature	
USA	Tel: (+49) 6227 33-0	Singapore 486066	© Copyright 2006
Phone: (+1) 314 679 4200	Fax: (+49) 6227 33-259	Phone: (+65) 6588-0188	Printed in Germany
Fax: (+1) 800 424 5359		Fax: (+65) 6588-3438	Web site:
		Email: sales@lincolnindustrial.com.sg	www.lincolnindustrial.com