User Manual
Operation Instructions

2.1EN-28009-C08

Pneumatic Lubrication Pump PTL 201

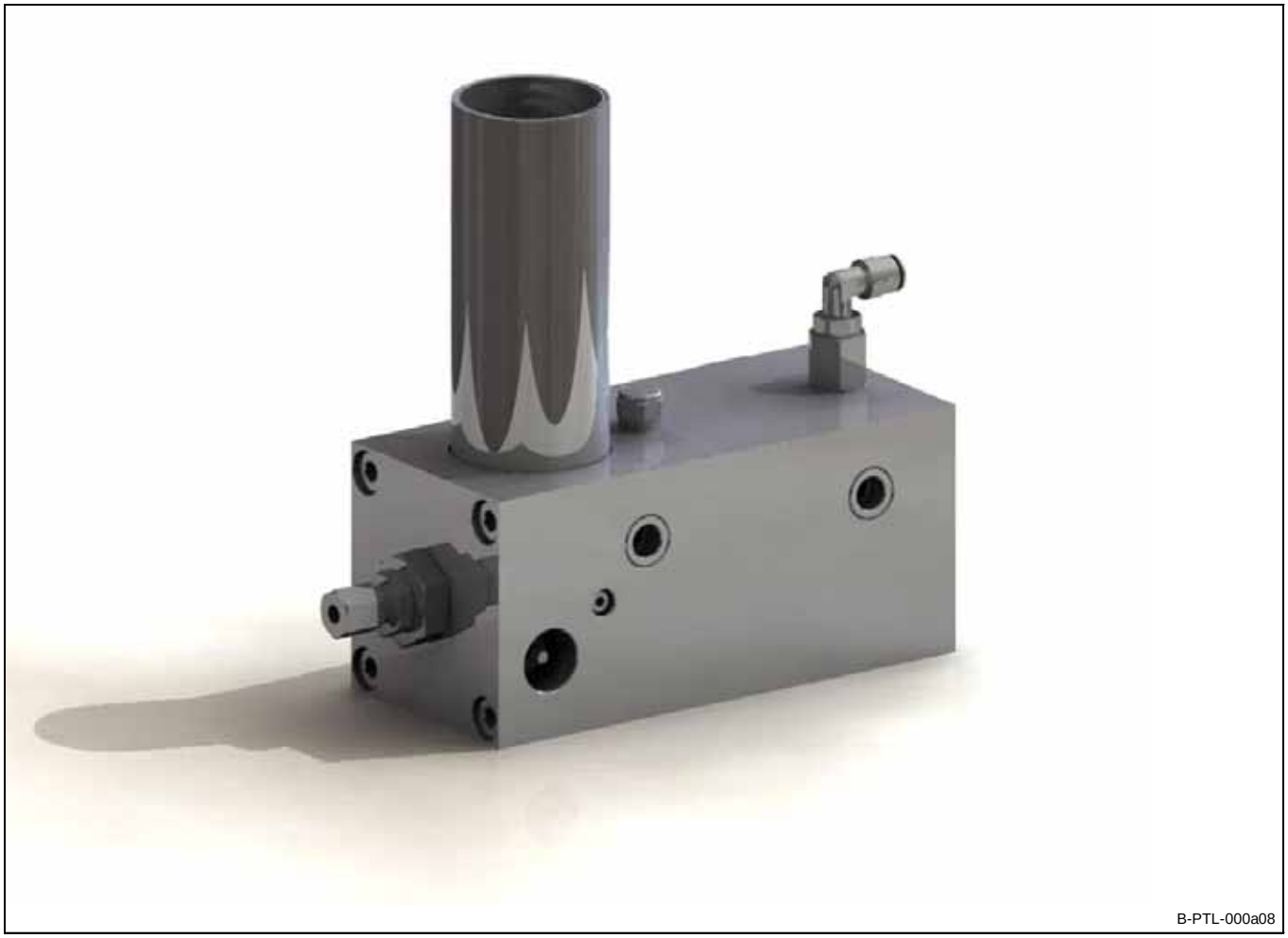

B-PTL-000a08

810-53093-1

Subject to modifications

LINCOLN GmbH • Postfach 1263 • D-69183 Walldorf • Tel +49 (6227) 33-0 • Fax +49 (6227) 33-259

LINCOLN GmbH
Postfach 1263
D-69183 Walldorf

Phone: +49 (6227) 33-0
Fax: +49 (6227) 33-259

Table of Contents

LINCOLN GmbH • Postfach 1263 • D-69183 Walldorf • Tel +49 (6227) 33-0 • Fax +49 (6227) 33-259

Introduction

Explanation of Symbols Used

The following description standards are used in this manual:

Safety Instructions

Structure of safety instructions:

- Pictogram
- Signal word
- Danger text
  - Danger note
  - How to avoid danger

The following pictograms are used in this manual and are combined with the corresponding signal words:

 1013A94	 4273a00	 6001a02
- ATTENTION	**- ATTENTION**	**- NOTE**
- CAUTION	**- CAUTION**	**- IMPORTANT**
- WARNING	**- WARNING**	

The signal words give the seriousness of danger if the following text is not observed:

ATTENTION	refers to faults or damages on machines.
CAUTION	refers to bad damages and possible injuries.
WARNING	refers to possible dangerous injuries.
NOTE	indicates improved operation of the device.
IMPORTANT	indicates special operating features of the device.

Example:


1013A94

ATTENTION!

When making use of other than the tested spare parts, serious damage may affect your device.

Therefore, for the operation of your device always use original parts made by Lincoln GmbH.

Furthermore, you will find the following text symbols in this manual:

- Listing of applicable statements
  - Subpoint of applicable statements

1. Determination of the number or sequence of contents

➲ Procedural instruction

User's Responsibility

To ensure the safe operation of the unit, the user is responsible for the following:

1. The pump / system shall be operated only for the intended use (see next chapter "Safety Instructions") and its design shall neither be modified nor transformed.
2. The pump / system shall be operated only if it is in a proper functioning condition and if it is operated in accordance with the maintenance requirements.
3. The operating personnel must be familiar with this Owner Manual and the safety instructions mentioned within and observe these carefully.

The correct installation and connection of tubes and hoses, if not specified by Lincoln GmbH, is the user's responsibility. Lincoln GmbH will gladly assist you with any questions pertaining to the installation.

Environmental Protection

Waste (e.g. used oil, detergents, lubricants) must be disposed of in accordance with relevant environmental regulations.

Service

The personnel responsible for the handling of the pump / system must be suitably qualified. If required, Lincoln GmbH offers you full service in the form of advice, on-site installation assistance, training, etc. We will be pleased to inform you about our possibilities to support you purposefully.
In the event of inquiries pertaining to maintenance, repairs and spare parts, we require model specific data to enable us to clearly identify the components of your pump / system. Therefore, always indicate the part, model and series number of your pump / system.

LINCOLN GmbH • Postfach 1263 • D-69183 Walldorf • Tel +49 (6227) 33-0 • Fax +49 (6227) 33-259

Safety Instructions

Appropriate Use

The pneumatic Lubrication Pump PTL 201 has been designed for the first installation as well as for a retrofit assembly. Use the pump only for the automatic lubrication of pneumatically driven devices and aggregates with lubricants up to NLGI grade 2.

Misuse

Any use of the pneumatic lubrication pump PTL 201 that is not expressly mentioned in this User Manual will be regarded as misuse.
If the pneumatic lubrication pump PTL 201 is used or operated in a different manner other than specified, any claim for warranty or liability will be null and void.

6001a02

NOTE

If personal injury or material damage occurs as a result of inappropriate operation, e.g. if the safety instructions are ignored or resulting from an incorrect installation of the PTL 201 pump, no claims or legal actions may be taken against Lincoln GmbH.

Exclusion of Liability

The manufacturer of the PTL 201 pump will not accept any liability for damages caused by

- insufficient lubricant and irregular replacement of empty cartridge.
- the use of contaminated lubricants.
- an environmentally inadequate disposal of used or contaminated lubricants or parts that were in touch with lubricants.
- unauthorized modification of system components.
- use of unapproved spare parts and lubricant cartridges respectively use of refillable cartridges with unapproved or contaminated lubricants (loss of warranty).

Regulations for Prevention of Accidents

To prevent accidents, observe all city, state and federal safety regulations of the country in which the pneumatic lubrication pump PTL 201 will be used.

General Safety Instructions

- Pneumatic lubrication pumps PTL 201
  - are designed state-of-the-art.
  - can be assembled for safe operation.
- Incorrect use may result in bearing damage caused by poor or excessive lubrication.
- Unauthorized modifications or changes to an installed system are not admissible. Any modification must be subject to prior consultation with the manufacturer of the lubrication system.
- Each time you replace the cartridge, make sure that the pump supplies lubricant afterwards.

Operation, Maintenance and Repair

1013A94

CAUTION!

Before beginning any maintenance or repair works on the pneumatic lubrication pump PTL 201 make sure that the pneumatic system of the carrier device is depressurized.

1013A94

CAUTION!

It is strictly prohibited to carry out any maintenance or repair works or to replace the cartridge while the carrier device is pressurized.

Operation/ Maintenance

Pneumatic lubrication pumps PTL 201

- may only be operated with a fitted pressure relief valve.
- must be equipped regularly with new clean lubricant cartridges. Cartridges are not refillable.
- operate automatically. However, a regular check (approximately every 2 days) should be made to ensure that the pump actually dispenses lubricant (observation).

Repairs

Repairs should only be performed by authorized and instructed personnel familiar with the regulations.

Disposal

Dispose of used or contaminated lubricants as well as of parts that were in touch with lubricant (e.g. empty cartridges) according to the legal regulations pertaining to environmental protection. Make sure to observe the safety data sheets of the lubricants used.

LINCOLN GmbH • Postfach 1263 • D-69183 Walldorf • Tel +49 (6227) 33-0 • Fax +49 (6227) 33-259

Safety Instructions, continuation

Assembly

1013A94

CAUTION!

Before installing or disassembling the PTL 201 pump, ensure that the pneumatic system of the carrier device (machine, drive) is depressurized.

- It is forbidden to manipulate the protection devices already installed on the carrier device
- Protective or safety equipment may be removed temporarily during the installation of the pump.
- The safety equipment must be properly put back in place after installation.
- Use only original Lincoln spare parts or parts and cartridges approved by Lincoln (see parts list, page 13).

6001a02

IMPORTANT NOTE

Observe the installation guidelines and instructions of the machine/unit manufacturer when drilling and welding, as well as the specified minimum distance on frames for bores between upper/lower rim of the frame or between two bores.

Assembly and Maintenance of the Pneumatic Hoses

1013A94

CAUTION!

The operational safety of the lubrication pump PTL 201 is only guaranteed with a professional installation and maintenance of pneumatic hoses/ lines. The following points must be observed!

Pneumatic Hoses

- must never be subjected to torsion
- must be installed twist-free
- must not rub against metal components or edges
- are to undergo regular visual checks and exchanged in the case of wear (or a the latest, 2 years after installation)

Pay attention with non-linear installations to allow for as large a bending radius as possible. Kinks are to be avoided. In constricted installation conditions use pipe elbow unions to avoid the danger of kinking behind the hose socket.

Type Code

Example of a type designation:

PTL - 2 0 1 - K6 - TV - VA

PTL
Pneumatic Tool Lubrication Pump

Version (type series)
Application

Number of pump elements

K6 = piston diameter 6 mm for grease

Version
TV = with air supply throttle
VA = with VA parts (e.g. for food industry)

Subject to modifications

LINCOLN GmbH • Postfach 1263 • D-69183 Walldorf • Tel +49 (6227) 33-0 • Fax +49 (6227) 33-259

Description

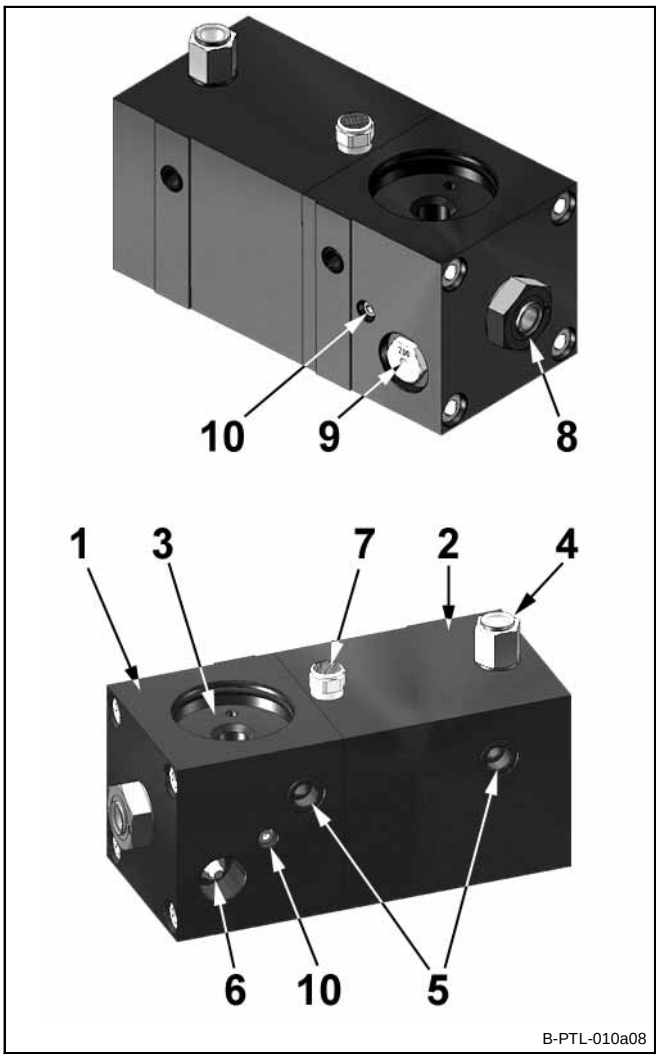

Fig. 1 Parts of the pneumatic lubrication pump model PTL 201

1 Cartridge housing
2 Control housing
3 Receptacle for cartridge [1)]
4 Pressure adapter [1)]
5 Fastening bores for M10 bolts
or with reducing sleeve (M10 to M6)
6 Lubrication fitting for manual lubrication
7 Muffler (adjustable) [1)]
7.1 Air outlet
8 Pump element
9 Pressure reducing valve 200 bar
10 Cylinder head screw M4 x 12 for bleeding

[1)] see note:

6001a02

NOTE

The connecting fitting for the connection to item 4 respectively the throttle for adjusting the air supply (Fig. 2) and the cartridge for insertion into item 3 are not included in the scope of delivery and must be ordered separately.

The Pump Model PTL 201

- is a pneumatically driven grease pump for the lubrication of devices that dispose of their own pneumatic system.
- is compact and can therefore be fitted directly to a carrier device (machine, drive). Together with the carrier device it forms a complete assembly.
- is driven by the pneumatic system of the carrier device.
- continuously delivers lubricant to the lubrication point while the carrier device is in operation and stops when the carrier device stops. The output can be adjusted optionally via air supply throttle (see fig. 2).
- is equipped with a visual lubricant level indicator by means of the position of the follower piston. If the follower piston is located in the low-level position of the cartridge, the cartridge must be replaced.
- is protected by means of a 200 bar pressure relief valve (fig. 1, item 9) (cartridge).
- is equipped with an easy-to-exchange pump element (fig. 1, item 8).
- Is equipped with a lubrication fitting (fig. 1, item 6) for manual lubrication (e.g. if the pneumatic system fails to operate).
- Does not require supplementary way valve.

Adapt lubricant quantity

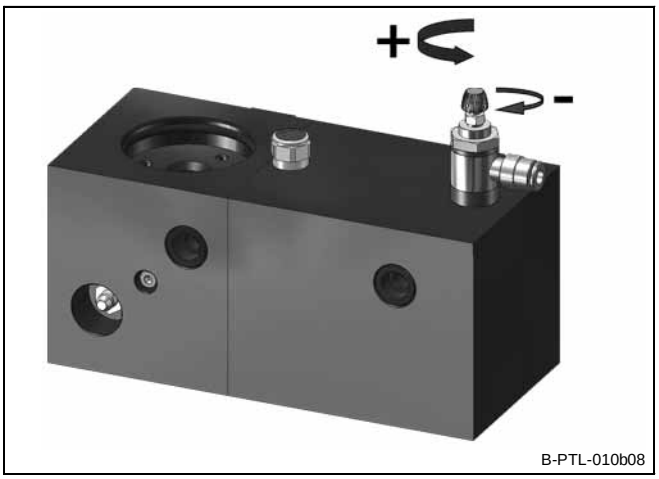

Fig. 2 Components of the pneumatic lubrication pump PTL 201

- The lubricant output can be adapted by means of an optional air supply throttle:

+	anticlockwise	more lubricant
–	clockwise	less lubricant

- Tip: Modifications of the discharged air can be noted acoustically (knocking noise of air piston).

LINCOLN GmbH • Postfach 1263 • D-69183 Walldorf • Tel +49 (6227) 33-0 • Fax +49 (6227) 33-259

Mode of Operation

PTL 201

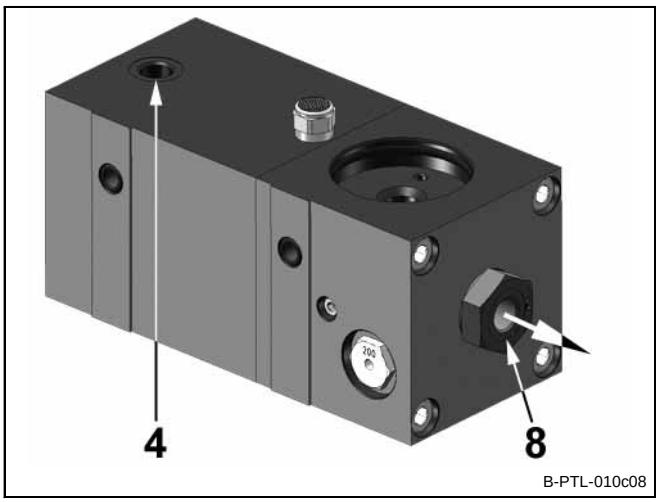

Fig. 3 Connections of pneumatic lubrication pump PTL 201

➲ Connect the lubrication pump PTL 201 by means of the following connecting tube fittings (fig. 3):

4 pressure adapter 1/4"
8 pump element with lubricant outlet 1/4"

- Compressed air (connection 4) pushes the supply piston of the pump element (connection 8) and the pre-metered lubricant quantity to the lubricant outlet via the control piston.

Pump Element

Fig. 4 Pump element (item 8)

During the lubrication time, the supply piston (8.2) sucks in lubricant from the cartridge via the suction bore (8.1) and delivers it to the connected lubrication point through the lubrication point (8.3). An integrated check valve prevents the lubricant from returning to the cartridge.

Piston diameter, K6 ..... 6 mm
Lubricant output .....approx. 0.14 cm³/stroke

8.1 - Suction bore
8.2 - Delivery bore
8.3 - Lubricant outlet, GE 8 x ¼

Pressure Relief Valve

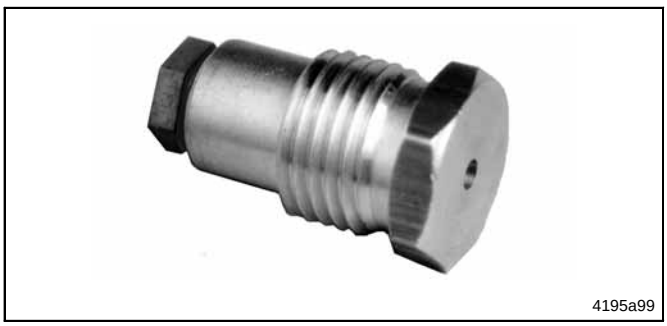

Fig. 5 Pressure relief valve (cartridge, item 9)

The pressure relief valve
- limits the pressure build-up in the system.
- opens when a pressure of 200 bar is reached.


6001a02

NOTE

If lubricant is expelled at the pressure relief valve, this indicates that there is a blockage in the line or at the lubrication point.

LINCOLN GmbH • Postfach 1263 • D-69183 Walldorf • Tel +49 (6227) 33-0 • Fax +49 (6227) 33-259

Maintenance


1013A94

ATTENTION!

Do not perform any maintenance or repair work or replace the cartridge while the carrier device is in operation.


1013A94

ATTENTION!

Before beginning with maintenance or repair work on the lubrication pump PTL 201 and before dismantling it, ensure that the pneumatic system of the carrier device is depressurized.

Lubricant Cartridge

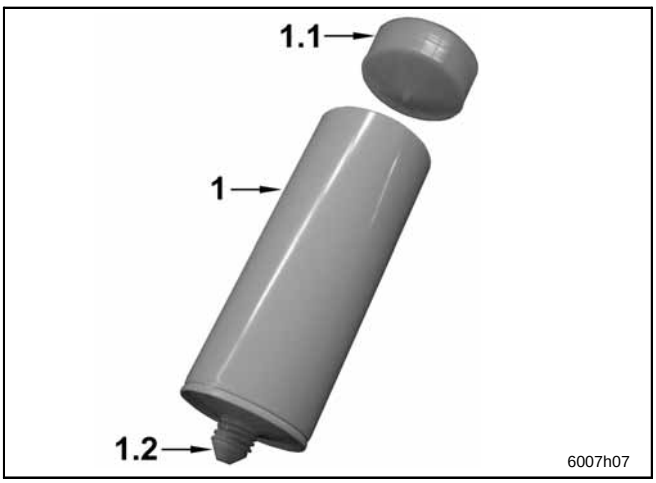

Fig. 6 Lubricant cartridge

Capacity ..... 150 g / 310 g
Lubricants ..... up to NLGI grade 2


6001a02

NOTE

The cartridges are not part of the scope of delivery, but have to be ordered separately.

IMPORTANT NOTE

Empty cartridges are to be disposed of according to relevant environmental regulations.

12 - Cartridge
12.1 - Follower piston
12.2 - Point of thread throat

Adapter

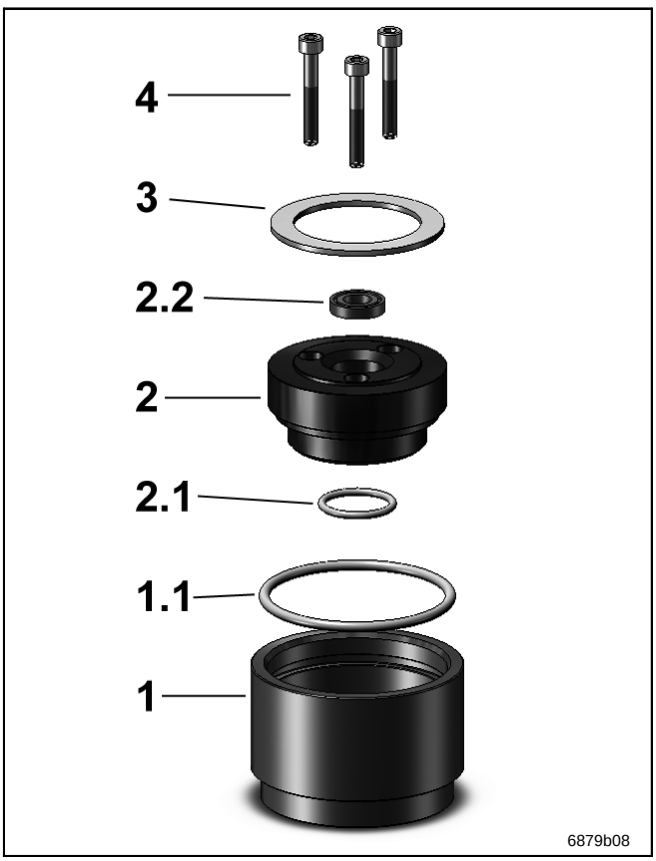

Fig. 7 Adapter for 400 g and 500 g lubricant cartridges

➲ Before the replacement or first insertion of a 400 g- or 500 g- cartridge, an adapter must be mounted to the housing of the cartridge at position 3 (Fig. 1).


6001a02

NOTE

Adapter part number for cartridges of 400 g or 500 g: *see page 13*

1 - Sleeve
1.1 - Sealing ring
2 - Assembly block
2.1 - Sealing ring
2.2 - Reduction for lubricant cartridges 400 g
3 - Washer
4 - Hexagonal socket head screws

LINCOLN GmbH • Postfach 1263 • D-69183 Walldorf • Tel +49 (6227) 33-0 • Fax +49 (6227) 33-259

Maintenance, continuation

First Insertion of Cartridge

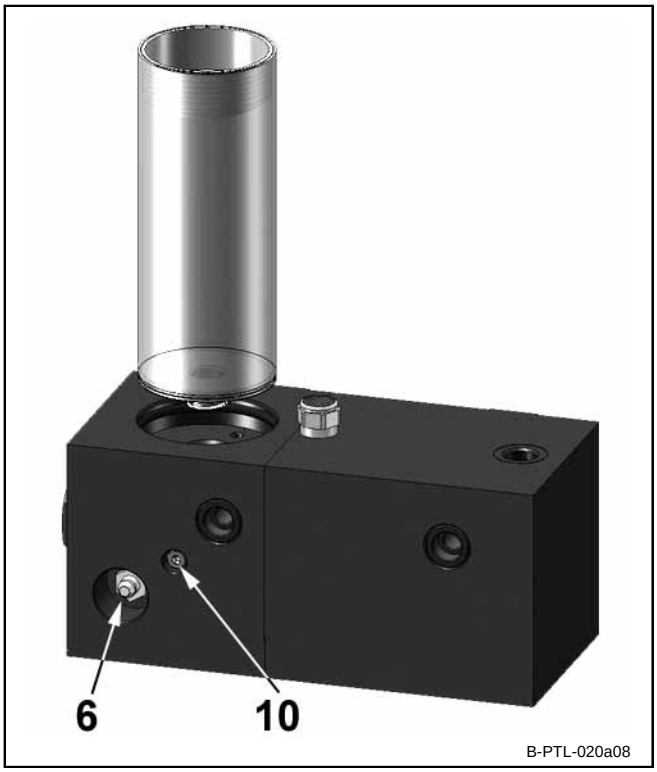

Fig. 8 Insert cartridge into lubrication pump PTL 201
6 Lubrication fitting for manual lubrication
10 Cylinder head screw M4 x 12 for bleeding

- Lightly grease the inner o-ring.
- Cut off tip of thread throat 1.2 (Fig. 6) of the new cartridge.
- Insert the cartridge in the bore by lightly pressing and screw it into the housing (presented as in Fig 8) hand-tightly.
- Vent housing:
  - Remove cylinder head screw 10 from front or rear side
  - Press follower piston 1.1 (Fig. 6) into the cartridge until lubricant comes out of the open bore
  - Close housing with cylinder head screw again
- Operate the pump by switching on the carrier device until lubricant flows out of the open outlet 8 (Fig. 3).

NOTE

The pump delivers lubricant very slowly. It may take a while before the lubricant flows out of the outlet without air bubbles.

6001a02

- Connect the supply hose to the lubrication point on the pump element 8 (Fig. 3).
- Fill the lubricant supply hose to the lubrication point via the hydraulic lubrication fitting 4 by means of a manually operated grease gun until the lubricant flows out at the lubrication point.

Replacement of Cartridge

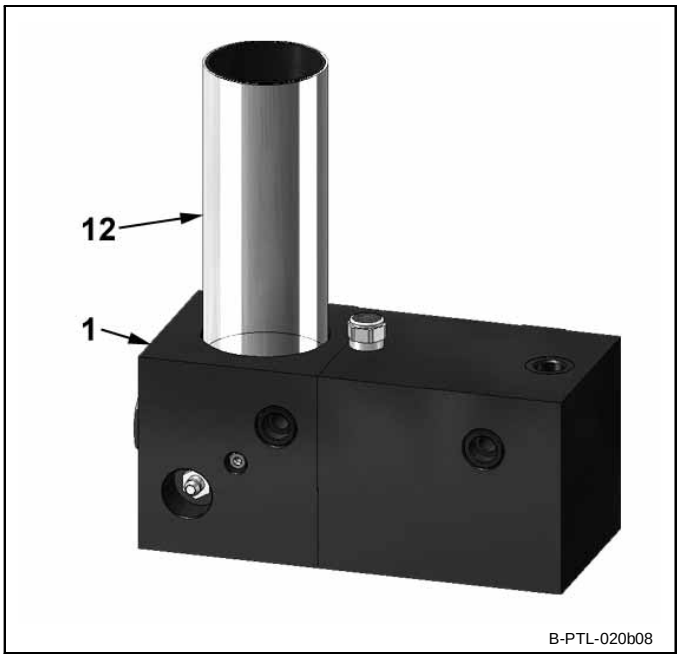

Fig. 9 Replacement of Cartridge

- Switch off the carrier device.
- Unscrew the old cartridge.
- Cut off the point of the thread throat 1.2 (Fig. 6) of the new cartridge.
- Press the follower piston 1.1 (Fig. 6) slightly until grease comes out of the cartridge.
- Press cartridge slightly into the cartridge, the screw it into the housing hand-tightly (as shown in Fig. 9).
- The pump is ready for operation again.

NOTE

If the pump does not dispense lubricant after 2 to 3 minutes, vent the housing (see chapter "Vent Housing", Fig. 8).

6001a02

1 Cartridge housing
12 Cartridge

LINCOLN GmbH • Postfach 1263 • D-69183 Walldorf • Tel +49 (6227) 33-0 • Fax +49 (6227) 33-259

Technical Data

Rating

Pneumatic system (carrier device):

Pneumatic input pressure P ..... 4 to 8 bar
minimum run-in pressure ..... 3,4 bar

Standard Fitting Connections

Pressure connection P ..... GE 8 x ¼“
Feed line ..... GE 8 x ¼“

Tightening Torques

Muffler (7) ..... 4 Nm ± 5 %
Hydraulic fitting (6) ..... 14 Nm ± 5 %
Pump element (8) ..... 25 Nm ± 5 %
Pressure relief valve (9) ..... 8 Nm ± 10 %
Cylinder head screws M4 x 12 (10) ..... 3 Nm ± 10 %
Cylinder head screws M8 x 80 (11) ..... 10 Nm ± 10 %

Lubrication Pump PTL 201

Output ..... 0.14 cm^3/stroke
Admissible operating temperature [1] ..... -25°C to +80°C
Ratio 75:1
Max. output ..... 8.4 cm^3/min

6001a02

[1] **NOTE**

The minimum operating temperature depends on the pumpability of the lubricants. For Lincoln chisel pastes, it is –25°C. Observe the manufacturer‘s specifications for standard greases.

Factory Output Settings

Throttle ..... 60 strokes/min

Dimensions

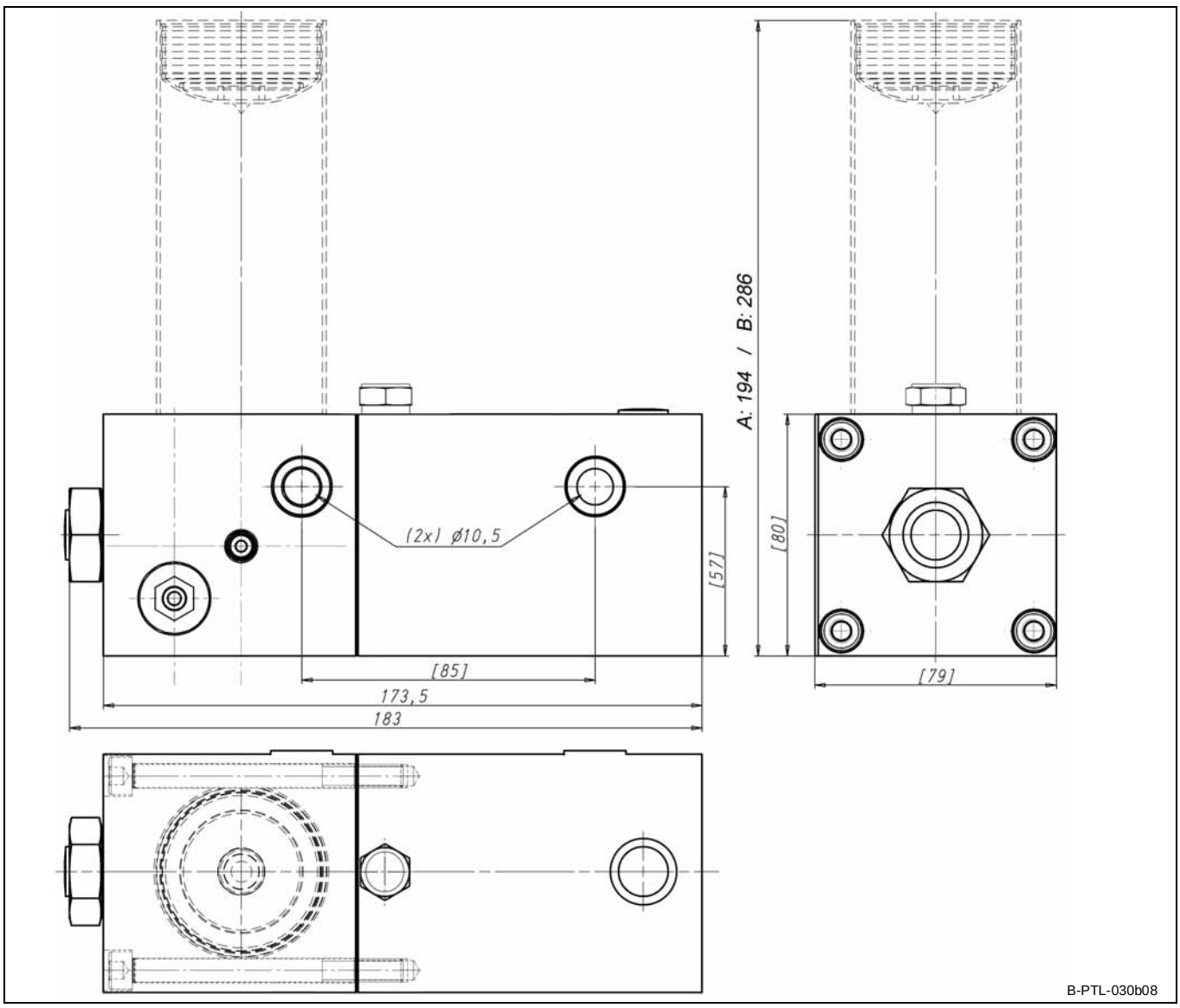

Fig. 9 Dimensions of pump PTL 201 (with 150 g cartridge)

A: Height 194 mm with 150 g - cartridge
B: Height 286 mm with 310 g - cartridge

Subject to modifications

LINCOLN GmbH • Postfach 1263 • D-69183 Walldorf • Tel +49 (6227) 33-0 • Fax +49 (6227) 33-259

Technical Data, continuation

Pneumatic Diagram

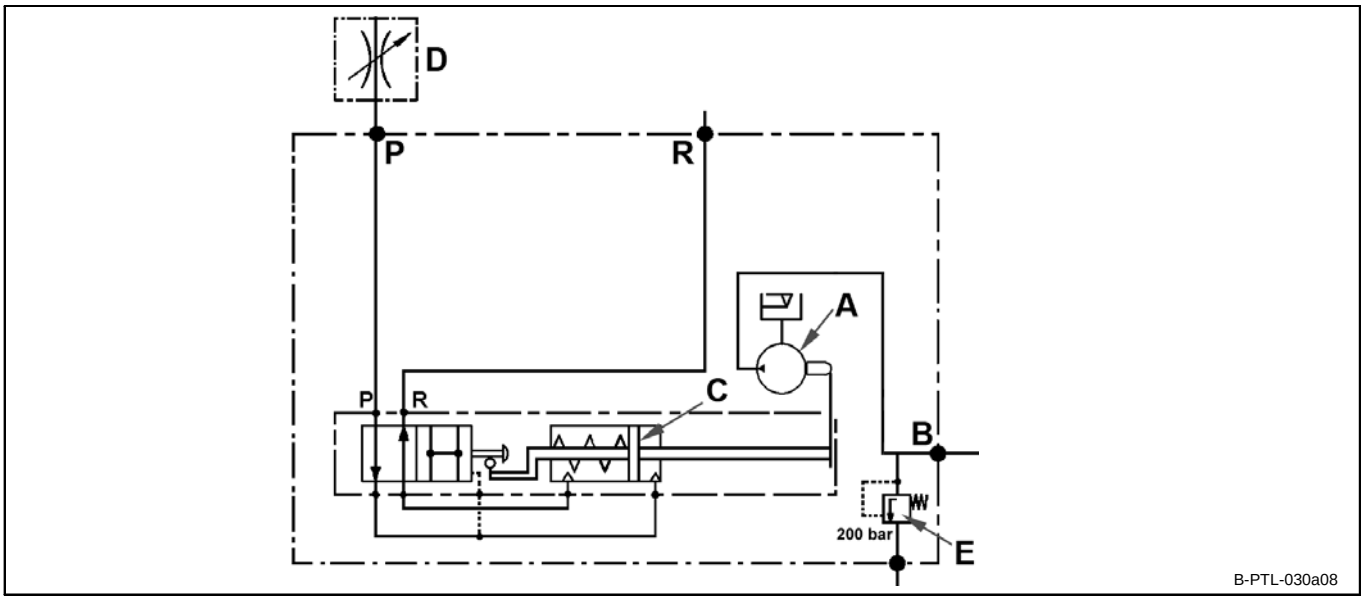

Fig. 10 Pneumatic diagram PTL 201

A - Mechanical pump (pump element) B - Lubricant outlet C - Rearrangement piston
P - Pressure connection R - Air outlet D – Air supply throttle (option) E - Pressure relief valve

Spare Parts and Parts List

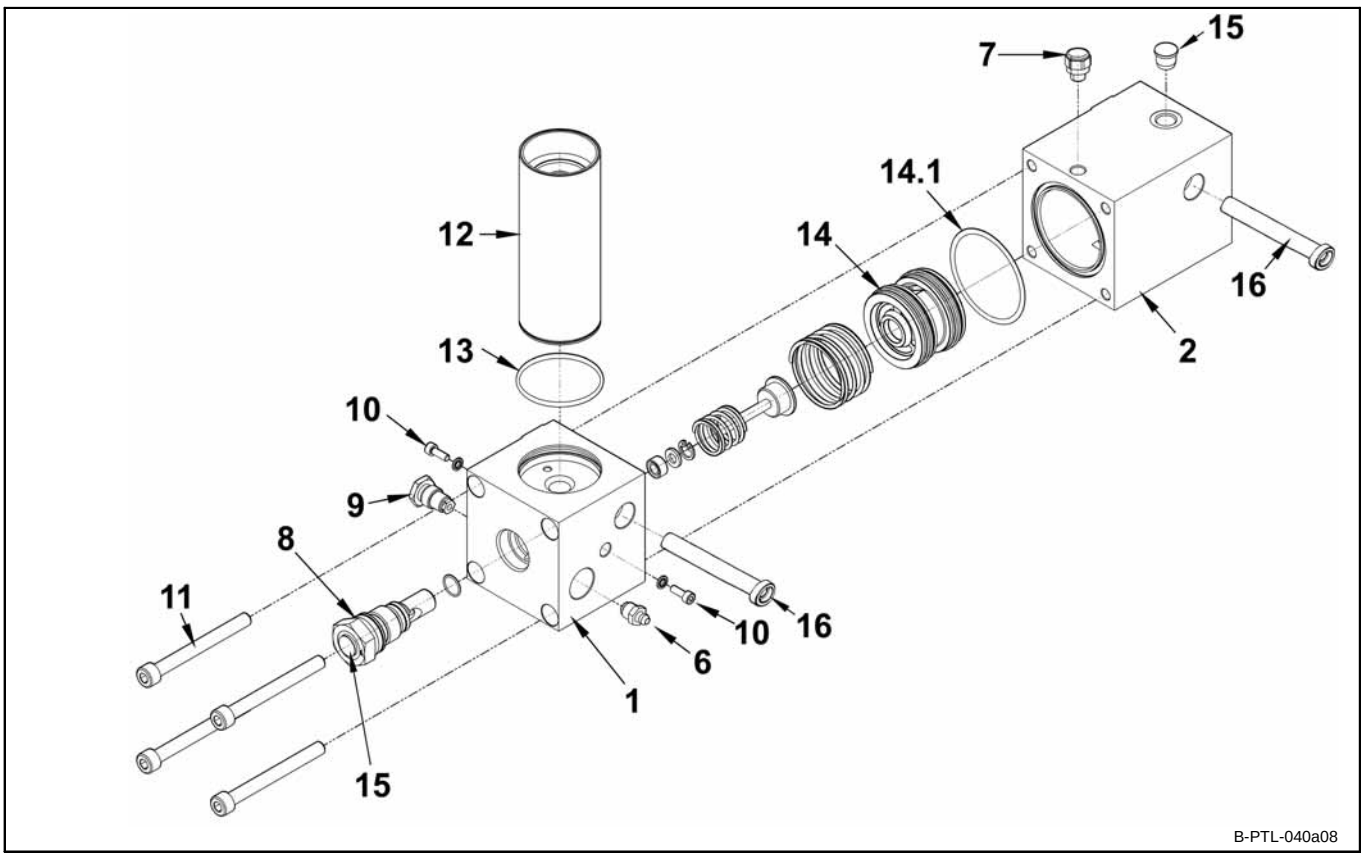

Fig. 11 Exploded drawing PTL 201

Subject to modifications

LINCOLN GmbH • Postfach 1263 • D-69183 Walldorf • Tel +49 (6227) 33-0 • Fax +49 (6227) 33-259

Exploded Drawing and Parts List, continuation

Pos.	Designation	Qty.	Part No.
	PTL 201 with pump element K6	1	642-41083-3
	- in VA version	1	642-41083-4
1	Cartridge housing, assy.	1	542-33094-1
	- in VA version	1	542-33096-1
2	Control housing, assy.	1	542-33130-1
4	Air supply throttle (option) Pos. D, Fig. 11 & Fig. 2	1	442-71885-1
6	Hydr. Lubrication fitting 1/8	1	251-14109-6
	Hydr. Lubrication fitting 1/8 VA	1	251-14073-9
7	Muffler	1	253-14050-3
8	Pump element K6	1	642-29892-1
	Pump element K6, chemically nickle-plated	1	642-29891-1
9	Pressure relief valve 200 bar	1	235-14343-1

Pos.	Designation	Qty.	Part No.
10	Cyl. Head screw 8.8 M4 x 12	2	201-12015-9
	Threaded packing GM1000 M4	2	220-14101-3
	Cyl. Head screw VA M4 x 12	2	201-13608-4
	Threaded packing VA GM1000 M4	2	220-14101-7
11	Cyl. Head screw M8 x 80	4	201-10431-7
	Cyl. Head screw VA M8 x 80	4	201-10471-2
12	Cartridge with grease Duraplex EP2 150 g	12	642-37609-3
	Cartridge with grease Duraplex EP2 310 g	12	642-37609-4
13	O-ring 72 NBR 49 x 2,5	1	219-10555-1
14	Rearrangement piston	1	542-32926-1
14.1	O-ring 72 NBR 58 x 2,5	1	219-10555-3
15	Plug TL-4-119 D11,9	2	233-13100-2
16	Reducing sleeve M10 to M6	2	542-34399-3

Tab. 1 Parts List

6001a02

NOTE

Connecting fittings and cartridges are n o t included in the scope of delivery and must be ordered separately.

Accessories

Designation		Qty.	Part No.
16	Reducing sleeve M10 to M6	2	542-34399-3
Adapter kit for 400 g cartridge, thread TR 22 x 2.75		1	542-33136-1
Adapter kit for 400 g cartridge, thread RD 15 x 2.5		1	542-33133-1
Adapter kit for 450 g cartridge, including guide, thread RD 15 x 2.5		1	542-33134-1
Adapter kit for 500 g cartridge, thread TR 20 x 2.5		1	542-33135-1

Tab. 2 Accessories

LINCOLN GmbH • Postfach 1263 • D-69183 Walldorf • Tel +49 (6227) 33-0 • Fax +49 (6227) 33-259

Troubleshooting

Fault: Pump does not deliver		
Cause:	**Remedy …**	**by operator personnel**
· Cartridge empty	➲ Replace the cartridge 12 (see page 10).	
· Lubricant supply blocked	➲ Check the cartridge.	
· Air entrapments in the suction area of the cartridge	➲ Vent cartridge housing 1 (see page 9 „First insertion of cartridge“).	
· Check valve in pump element defective	➲ Replace pump element.	
Cause:	**Remedy …**	**by service personnel**
· No or little air pressure available	➲ Check pneumatic system and repair it. ➲ Check the tube and hose lines and replace them.	

Fault: Lubricant quantity too low		
Cause:	**Remedy …**	**by service personnel**
· Too low air pressure, Air supply throttle not adjusted correctly	➲ Check air supply, readjust air supply throttle (see fig. 2, page 7).	
· Muffler clogged	➲ Clean muffler or replace if necessary.	

Fault: Lubricant quantity too high		
Cause:	**Remedy …**	**by service personnel**
· Air supply throttle not adjusted correctly	➲ Readjust air supply throttle (see fig. 2, page 7).	

Fault: Lubricant leaking from cartridge insert		
Cause:	**Remedy …**	**by service personnel**
· Leakage	➲ Remove cartridge 12 and check the o-ring 13 and replace it if necessary. ➲ Check whether cartridge is threaded in hand-tightly (see page 10).	

Fault: Lubricant leaking from pressure reducing valve (item 9)		
Cause:	**Remedy …**	**by service personnel**
· Lubricant line or lubrication point clogged	➲ Check the lubricant line and the lubrication points for possible causes of the blockade.	

Tab. 2 Troubleshooting

LINCOLN GmbH • Postfach 1263 • D-69183 Walldorf • Tel +49 (6227) 33-0 • Fax +49 (6227) 33-259

Declaration by the manufacturer

D	GB	F	I
Herstellererklärung im Sinne der EG-Richtlinie Maschinen 98/37/EG, Anhang II B	**Declaration by the manufacturer as defined by machinery directive 98/37/EEC Annex II B**	**Déclaration du fabricant conformément à la directive 98/37/CEE, annexe II B**	**Dichiarazione del costruttore ai sensi della direttiva 98/37/CEE in materia di macchinari, Appendice II B**
Hiermit erklären wir, dass die Bauart von	*Herewith we declare that the supplied model of*	*Par la présente, nous déclarons que le produit ci-dessous*	*Si dichiara che il prodotto da noi fornito*

Product: PTL 201

in der von uns gelieferten Ausführung zum Einbau in eine Maschine bestimmt ist und dass ihre Inbetriebnahme solange untersagt ist, bis festgestellt wurde, dass die Maschine, in die das o.g. Produkt eingebaut werden soll, den Bestimmungen der oben genannten Richtlinie – einschließlich deren zum Zeitpunkt der Erklärung geltenden Änderungen – entspricht.	*is intended to be incorporated into machinery covered by this directive and must not be put into service until the machinery into which it is to be incorporated has been declared in conformity with the provisions of the above mentioned directive – including all modifications of this directive valid at the time of the declaration.*	*dans l'exécution dans laquelle nous le livrons, est destiné à être installé sur une machine, et que sa mise en service est interdite tant qu'il n'aura pas été constaté que la machine sur laquelle il sera installé est conforme aux dispositions de la directive ci-dessus, y compris les modifications qui y auront été apportées et qui seront valides à la date de la déclaration.*	*è destinato all' installazione su di un macchinario e che la sua messa in funzione non sarà autorizzata fino a quando non sarà stata accertata la conformità del macchinario, sul quale esso dovrà essere installato, in relazione alle disposizioni della direttiva 98/37/CEE – comprese tutte la rettifiche di questa direttiva al momento della dichiarazione.*
Angewendete harmonisierte Normen, insbesondere	*Applied harmonized standards in particular*	*Normes harmonisées, notamment*	*Norme armonizzate applicate in particolare*

Standards: DIN EN ISO 12100-1; DIN EN ISO 12100-2; DIN EN ISO 809

23.08.2005 Z. Paluncic

(Datum / Unterschrift)	*(date / signature)*	*(date / signature)*	*(data/firma)*

GR	E	P	NL	DK
Δηλωση του κατασκευασ του συμφ. με τις προδιαγρ αφες: 98/37/ΕΟΚ, παρ. ΙΙ Β	**Declaración del fabricante conforme con la Directiva CE sobre máquinas 98/37/CEE, Anexo II B**	**Declaração do Fabricante segundo directiva CE 98/37/CEE, Anexo II B**	**Verklaring van de fabrikant inzake de richtlijn betreffende machines, (98/37/EEG, bijlage II B)**	**Fabrikantens erklaring i henold til EF-lovgivning om maskiner 98/37/EØF bilag II b**
Δια του παροντος σας γνω–στοποιουμε, οτι το προιον	*Por la presente, declaramos que el modelo suministrado*	*Em anexo declaramos que o modelo fornecido*	*hiermede verklaren wij, dat de*	*Hermed erklares, at*

Product: PTL 201

προοριζεται για τοποθετηση εντος μηχανηματος, και οτι δεν επιτρεπεται να τεθει σε λειτουργια μεχρις οτου διαπιστωθει, οτι το μηχανημα εντος του οποιου προκειται να τοποθετηθει ανταποκρινετ αι στις προαναφερομενες ισχυουσες προ – διαγραφες (συμπεριλαμβανο–μενων των αλλαγων που ισχυ –ουν και που εγιναν στο χρον ι–κο αυτο διαστημα).	*es destinado a ser incorporado en una máquina y que su puesta en servicio está prohibida antes de que la máquina en la que vaya a ser incorporado haya sido declarada conforme a las disposiciones de la Directiva en su redacción 98/37/CEE – incluso las modificaciones de la misma vigentes a la hora de la declarción.*	*deverá ser incorporado na maquinaria coberta por esta directiva e não poderá ser colocado em serviço até a maquinaria na qual é para ser incorporado for declarada em conformidade com as provisões da directiva acima mencionada / incluindo todas as modificações desta directiva válida desde a emissão desta declaração.*	*ertoe bestemd is, ingebouwd te worden in een machine en dat een inwerkstelling verboden is, voordat vastgesteld is, dat de machine, waarin deze machine wordt ingebouwd, in overeenstemming met de bepalingen van de richtlijn 98/37/EEG – ingesloten de tot dit tijdstip geldende veranderingen van deze richtlijn - verklaard is.*	*er bestemt til inkorpoering i en maskine og at igangsætningen forbydes indtil der er konstateret, at maskinen, som skal inkorporeres i denne maskine, er bragt i overensstemmelse med alle relevante bestemmelser, samt ændringer gældende på deklarationstidspunktet.*
Προσθετα προς εφαρμογην χρησιμοποιηθησες εναρμον ισμενες προδιαγραφες	Normas armonizadas utilizadas, particularmente	Normas harmonizadas utilizadas, em particular	Gebruikte geharmoniseerde normen,namelijk	Harmoniserede standarder, der blev anvendt,i særdeleshed

Standards: DIN EN ISO 12100-1; DIN EN ISO 12100-2; DIN EN ISO 809

23.08.2005 Z. Paluncic

(ημερομηνια / υπογραφη)	*(fecha / firma)*	*(Data / assinatura)*	*(Datum/ handtekening)*	*(dato/underskrift)*

Subject to modifications

LINCOLN GmbH • Postfach 1263 • D-69183 Walldorf • Tel +49 (6227) 33-0 • Fax +49 (6227) 33-259

America:	**Europe/Africa:**	**Asia/Pacific:**	
Lincoln Industrial	Lincoln GmbH	Lincoln Industrial Corporation	
One Lincoln Way	Heinrich-Hertz Straße 2-8	51 Changi Business Park Central 2	
St. Louis, MO 63120-1578	69190 Walldorf, Germany	# 09-06 The Signature	
USA	Tel: (+49) 6227 33-0	Singapore 486066	© Copyright 2008
Phone: (+1) 314 679 4200	Fax: (+49) 6227 33-259	Phone: (+65) 6588-0188	Printed in Germany
Fax: (+1) 800 424 5359		Fax: (+65) 6588-3438	Web site:
		Email: sales@lincolnindustrial.com.sg	www.lincolnindustrial.com