4.1EN-10004-A08

Mechanically-Driven Oil Lubrication Pump

MOP 112

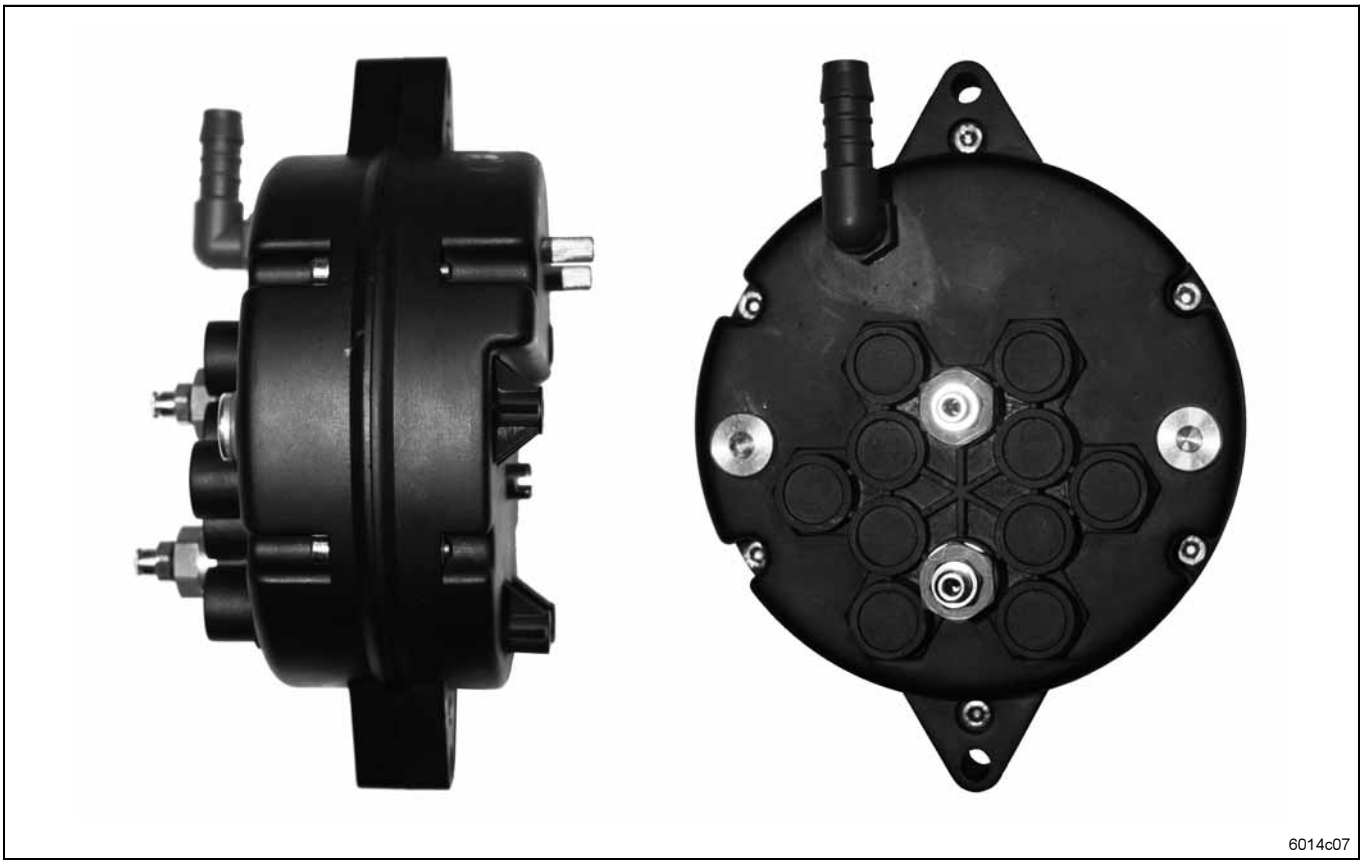

6014c07

810-53025-1

Subject to modifications

LINCOLN GmbH • Postfach 1263 • D-69183 Walldorf • Tel +49 (6227) 33-0 • Fax +49 (6227) 33-259

LINCOLN GmbH
Postfach 1263
D-69183 Walldorf

Phone: +49 (6227) 33-0
Fax: +49 (6227) 33-259

Table of Contents

LINCOLN GMBH • POSTFACH 1263 • D-69183 WALLDORF • TEL +49 (6227) 33-0 • FAX +49 (6227) 33-259

Introduction

Explanation of Symbols Used

The following description standards are used in this manual:

Safety Instructions

Structure of safety instructions:

- Pictogram
- Signal word
- Danger text
  - Danger note
  - How to avoid danger

The following pictograms are used in this manual and are combined with the corresponding signal words:

 1013A94	 4273a00	 6001a02
- ATTENTION	**- ATTENTION**	**- NOTE**
- CAUTION	**- CAUTION**	**- IMPORTANT**
- WARNING	**- WARNING**	

The signal words give the seriousness of danger if the following text is not observed:

ATTENTION	refers to faults or damages on machines.
CAUTION	refers to bad damages and possible injuries.
WARNING	refers to possible dangerous injuries.
NOTE	indicates improved operation of the device.
IMPORTANT	indicates special operating features of the device.

Example:


1013A94

ATTENTION!

When making use of other than the tested spare parts, serious damage may affect your device.

Therefore, for the operation of your device always use original parts made by Lincoln GmbH.

Furthermore, you will find the following text symbols in this manual:

- Listing of applicable statements
  - Subpoint of applicable statements

1. Determination of the number or sequence of contents

➲ Procedural instruction

User's Responsibility

To ensure the safe operation of the unit, the user is responsible for the following:

1. The pump / system shall be operated only for the intended use (see next chapter "Safety Instructions") and its design shall neither be modified nor transformed.
2. The pump / system shall be operated only if it is in a proper functioning condition and if it is operated in accordance with the maintenance requirements.
3. The operating personnel must be familiar with this Owner Manual and the safety instructions mentioned within and observe these carefully.

The correct installation and connection of tubes and hoses, if not specified by Lincoln GmbH, is the user's responsibility. Lincoln GmbH will gladly assist you with any questions pertaining to the installation.

Environmental Protection

Waste (e.g. used oil, detergents, lubricants) must be disposed of in accordance with relevant environmental regulations.

Service

The personnel responsible for the handling of the pump / system must be suitably qualified. If required, Lincoln GmbH offers you full service in the form of advice, on-site installation assistance, training, etc. We will be pleased to inform you about our possibilities to support you purposefully.
In the event of inquiries pertaining to maintenance, repairs and spare parts, we require model specific data to enable us to clearly identify the components of your pump / system. Therefore, always indicate the part, model and series number of your pump / system.

LINCOLN GmbH • Postfach 1263 • D-69183 Walldorf • Tel +49 (6227) 33-0 • Fax +49 (6227) 33-259

Safety Instructions

Appropriate Use

The MOP 112 mechanically-operated oil lubrication pump is a single-line system designed for the lubrication of link chains in agricultural equipment and other applications.
The oil system is able to supply mineral, synthetic or biological oils (see chapter "Technical Data").

Misuse

Any use of the MOP 112 that is not expressly mentioned in this User Manual will be regarded as misuse.
If the MOP 112 is used or operated in a different manner other than specified, any claim for warranty or liability will be null and void.


6001a02

NOTE

If personal injury or material damage occurs as a result of inappropriate operation, e.g.
- safety instructions are ignored
- use of inadequate lubrication oil
- incorrect installation of the MOP
no claims or legal actions may be taken against Lincoln GmbH.

Exclusion of Liability

The manufacturer of the MOP 112 does not accept any liability for damages caused by

- poor lubrication due to
  - late refilling of reservoir
  - wrong position of the MOP 112 (inclined position of MOP or reservoir)
  - wrong installation of mechanical drive
  - failure of mechanical drive (caused by system operator)
- operation with contaminated oils
- use of oils that are inappropriate or only conditionally appropriate for the lubricating device or which are not pumpable
- inappropriate disposal of used or contaminated oils or components
- arbitrary modification of system parts
- use of unauthorized spare parts

Accident Prevention Regulations

To prevent accidents, observe all city, state or provincial and federal safety regulations of the country in which the MOP 112 will be used.

General Safety Instructions

- MOP 112 mechanically-driven oil lubrication pumps
  - are designed with state-of-the-art technology
  - can be assembled for safe operation
- Incorrect use may result in bearing damage caused by insufficient or excessive lubrication of the link chains
- Modifications or alterations to an installed system by the customer are subject to prior consultation with the manufacturer of the lubrication system or with its appointed dealer.
- MOP 112 oil pumps are to be installed with the filler cap showing to the top
- After each transport make sure that the pump supplies oil.

Operation, Maintenance and Repair


1013A94

CAUTION!

Before starting any maintenance or repair work, disconnect the MOP 112 from the power supply to avoid unintended operation.


1013A94

ATTENTION!

Malfunctions or damages due to contamination!
Avoid any contamination when
- *opening the lubricating device*
- *carrying out maintenance or repair work*
- *refilling oil*

Repairs

Repairs may be performed only by authorized and qualified persons who are familiar with all applicable regulations.

Operation/ Maintenance

MOP 112 mechanically-driven oil lubrication pumps

- shall regularly be filled with clean oil through the filter insert 9 (Fig. 5)
- shall be checked at regular intervals (approx. every 2 days) on whether the pump actually supplies oil (visual control).

Disposal

Dispose of used or contaminated oils according to the legal regulations pertaining to environmental protection.

LINCOLN GMBH • POSTFACH 1263 • D-69183 WALLDORF • TEL +49 (6227) 33-0 • FAX +49 (6227) 33-259

Safety Instructions, continuation

Installation

1013A94

ATTENTION!

The use of any spare parts can result in serious damage to your lubrication device. Therefore, for the operation of your lubrication device use only original spare parts[1] by Lincoln GmbH.

[1] See as of page 14 "Spare Parts and Accessories"

6001a02

IMPORTANT

Observe the installation guidelines and instructions of the machine/ unit manufacturer when drilling and welding, as well as the specified minimum distance on vehicle/ chassis frames for holes between upper/lower rim of the frame or between two bores.

Installation and Maintenance of Lubricating Hoses

1013A94

ATTENTION!

The operational safety of the MOP (mechanically-driven oil pump) is only guaranteed with a professional installation and maintenance of hydraulic hoses/lines. Observe the following points!

Lubrication lines

- may never be subjected to torsion
- must be installed twist-free
- must not rub against metal components or edges
- are to undergo regular visual checks and must be exchanged in the case of wear.

Pay attention with non linear installations to allow for as large a bending radius as possible. Avoid kinks! In constricted installation conditions use pipe elbow unions to avoid the danger of kinking behind the hose socket.

Installation

Location & Fixation

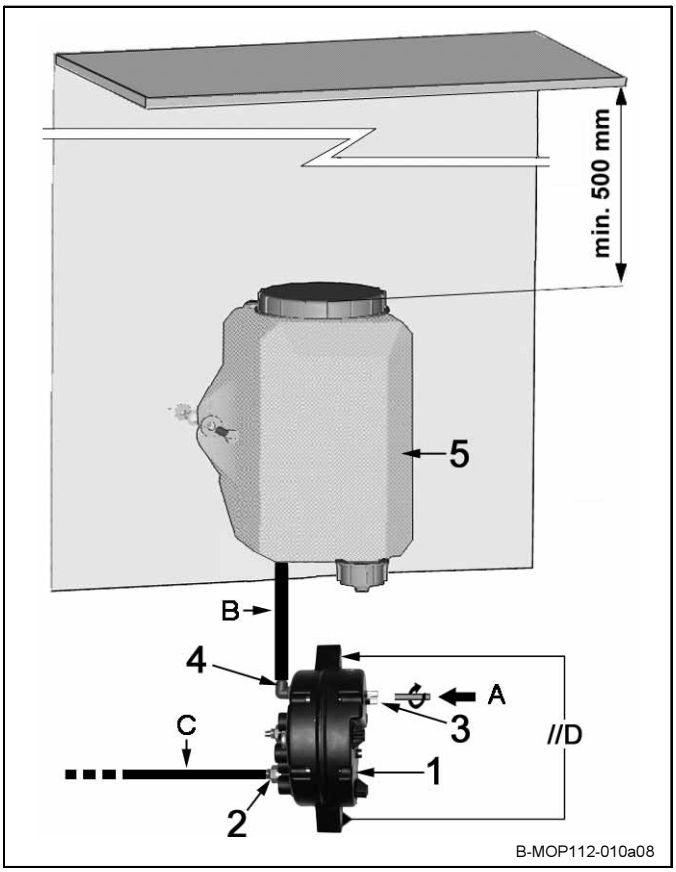

Fig. 1 Installation of MOP and reservoir

- ➲ Install the MOP 1 (Fig. 1) vertically and on smooth planes (//D = max. 0.3 mm) directing the MOP driving shaft 3 to the prolonged driving shaft A (provided by the user).
  MOP driving shaft Ø …… 8 mm
  MOP range of speeds:
  - Shaft 1 / 2 …… 30 up to 280 min^{-1}
- ➲ Fix the reservoir 5 of the MOP vertically. Make sure to provide a proper line run B between MOP (on driving shaft A) and reservoir 5.
- ➲ Provide sufficient space for a later filling of the reservoir from the top (min. 500 mm).
- A fastening set consisting of 2 screws, 4 washers and 2 nuts (M8) is included in each MOP 112 supplied (tightening torque 10 Nm ±5%).

1013A94

CAUTION!

Before starting any maintenance or repair work, disconnect the MOP from the power supply to avoid unintended operation.

1 - MOP (mechanically-driven oil pump)
2 - Pump element (1 of optional 12)
3 - MOP driving shaft
4 - MOP inlet port
5 - Reservoir, 5 liters
A - Driving shaft (to be provided by user)
B - Lubricant supply line (Ø 12 mm)
C - Lubricant feed line (Ø 6 mm)
//D - Admissible tolerance of smoothness (0.3 mm)

Subject to modifications

LINCOLN GmbH • Postfach 1263 • D-69183 Walldorf • Tel +49 (6227) 33-0 • Fax +49 (6227) 33-259

Installation, continuation

Connection of the Lubricant Supply

➲ Connect the port on the bottom of reservoir 5 (Fig. 1) with supply line B (Ø 12 mm) and with MOP inlet port 4.

Use of Quicklinc Connecting Elements

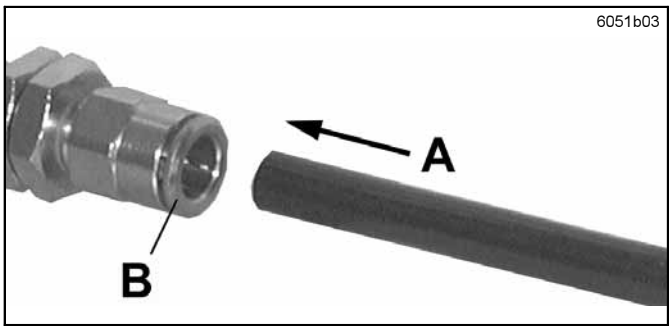

Fig. 2 Connection of Quicklinc connecting element and line

Connect

➲ Push the line in the direction of arrow A (Fig. 2) into the Quicklinc connecting element until it stops.

Disconnect

➲ Press the line together with pliers B in the direction of arrow A into the Quicklinc connecting element in order to loosen the fastening clamps.

➲ Hold pliers B tight and pull out the line in the opposite direction to arrow A.

Pump Elements

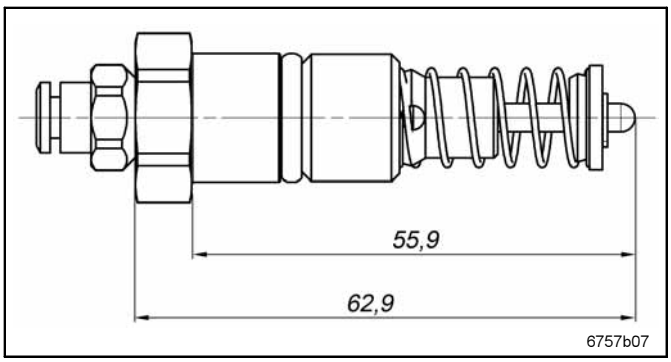

Fig. 3 Pump Element

- Pump elements are available in 3 versions: without/ with 1/ with 2 metering washers.
- The MOP can be supplied with up to 12 preassembled pump elements.
- The output of a pump element depends on the number of preassembled metering washers and the speed of the driving shaft provided by the user.
- Preassembled pump elements can be unscrewed for replacement purposes.
- Instead of a pump element, the MOP can also be equipped with a closure plug at the intended port.

6001a02

IMPORTANT

To avoid the emptying of the full MOP, interrupt the lubricant supply from the reservoir and reduce the oil level in the MOP.

Make sure to check the lube points visually in order to avoid unintended lubricant penetration.

Connection of Lube Points

➲ Connect respectively one lube point (brush, felt strip, Fig. 6) with a pump element of suitable output. Therefore use feed line Ø 6 mm (Pos. C).

➲ In any application, make sure that the oil quantity is distributed evenly over the whole width of the link chain (Fig. 6 & 7 in Fig. 6).

LINCOLN GMBH • POSTFACH 1263 • D-69183 WALLDORF • TEL +49 (6227) 33-0 • FAX +49 (6227) 33-259

Start-up

Filling of Reservoir

If the reservoir is positioned vertically and the oil level is at or below the minimum marking, you have to refill oil.

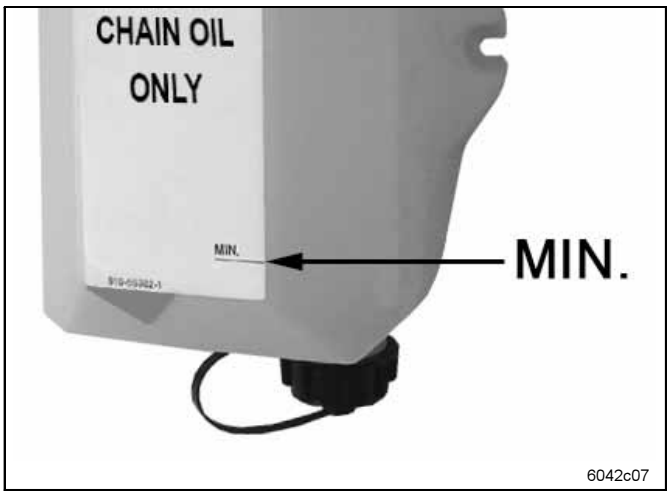

Fig. 4 Oil-level check in the reservoir


6001a02

IMPORTANT

CHAIN OIL ONLY!

Observe paragraph "Suitable Oils" in chapter "Technical Data".

- Make sure that the reservoir is filled with oil and is positioned vertically.
- Should the oil level be too low, open the reservoir cover 8 (Fig. 5).
- Refill clean oil through filter insert 9.
- Close the reservoir cover again in order to avoid contamination inside the reservoir.

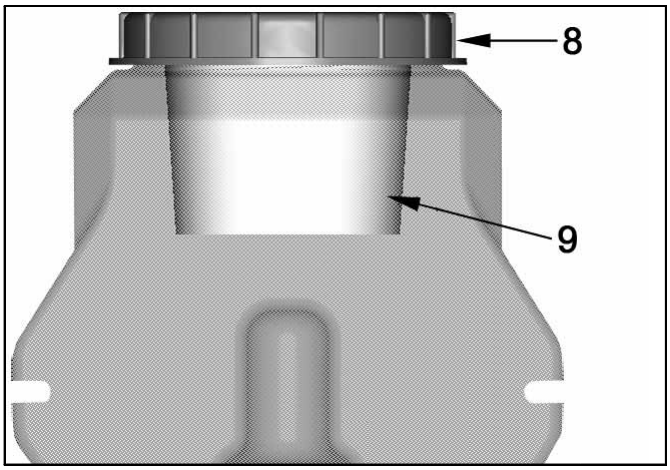

Fig. 5 Filling of the 5-liter reservoir

8 - Reservoir cover
9 - Filter insert

Filling of Line System

- The filling of lubrication lines with lengths over 0.5 m in the installed system proceeds very slowly due to the pump elements. The filling time can be reduced by filling the lines directly with an oil gun or oil injection device.
- Block both ends of the filled feed line by hand so that no oil can penetrate.
- Reconnect the feed line between its original ports again.
- Repeat this procedure for each empty feed line.

LINCOLN GmbH • Postfach 1263 • D-69183 Walldorf • Tel +49 (6227) 33-0 • Fax +49 (6227) 33-259

Description

System Design

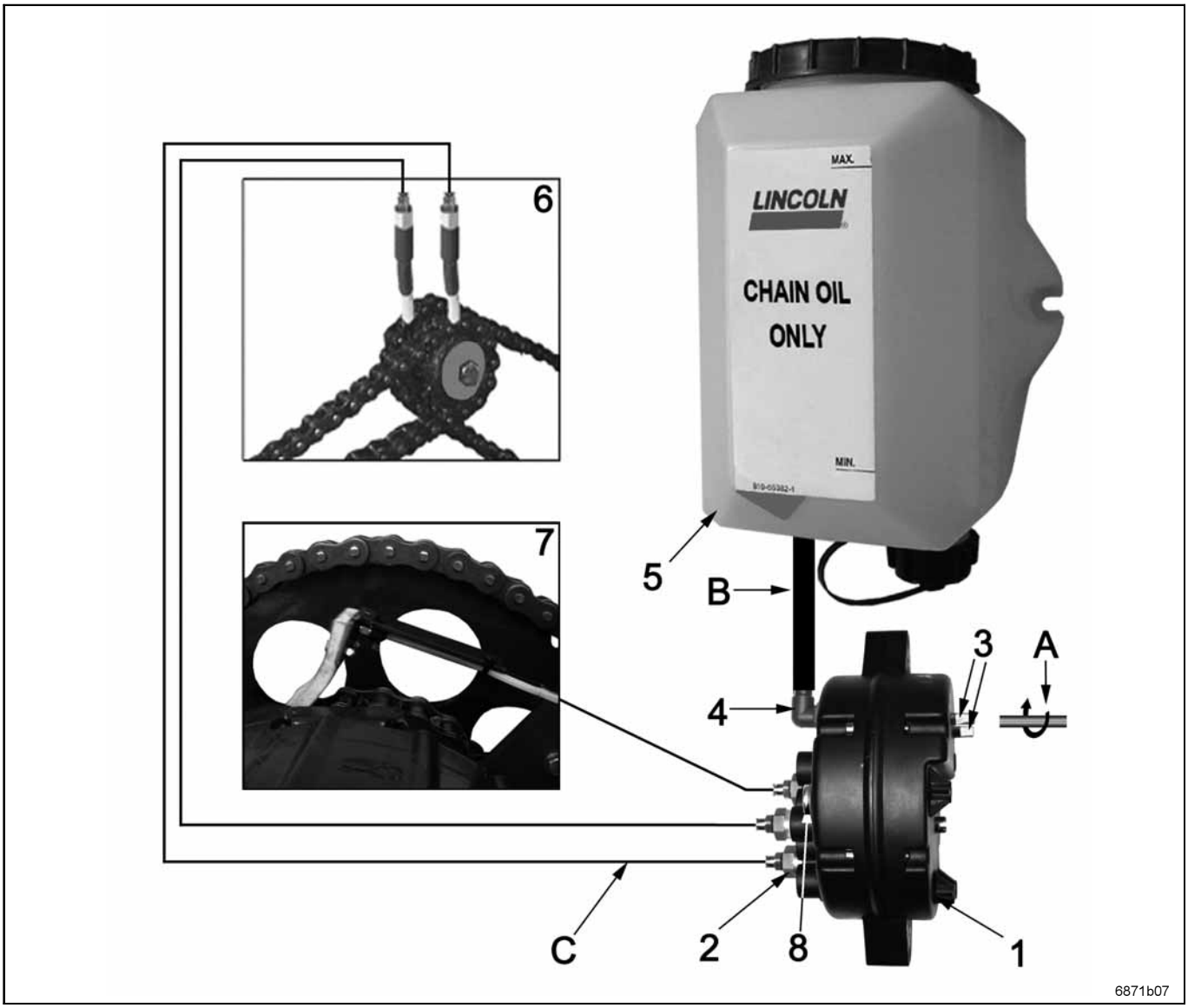

Fig. 6 Schematic structure of the MOP 112

1 - MOP (mechanically-operated oil pump)
2 - Pump elements (1 to 12)
- Factory configuration, see Fig. 7
3 - MOP driving shaft
- Output shaft 1, see Fig. 12
- Output shaft 2, see Fig. 13
4 - MOP inlet port
5 - 5-liter reservoir
6 - Application with brushes
7 - Application with felt strips
8 - Vent valves

A - Driving shaft (provided by user)
B - Lubricant supply line (Ø 12 mm)
C - Lubricant feed line (Ø 6 mm)

Operating Method

The MOP 112 mechanically driven oil lubrication system is driven by the driving shaft A (Fig. 6) of a carrier device (i.e. baler). The rotary movement of the driving shaft 3 is transmitted to various cam disks inside the MOP. These cam disks then activate the installed pump elements 2 (maximum 12 pump elements). Thereby the differences in height of the curve disks are converted into piston strokes of the pump elements. The oil quantity supplied in this way is pumped from the pump element directly to the feed lines C.

For proper operation the housing of the MOP (Pos. 1) must be filled with oil always. This is ensured by supply line B connected to the reservoir.

LINCOLN GmbH • Postfach 1263 • D-69183 Walldorf • Tel +49 (6227) 33-0 • Fax +49 (6227) 33-259

Identification Code MOP 112

Examples of type designations:

MOP 112 - 12 / 9 - 3 x A , 4 x B , 2 x C , 3 x V -

MOP 112 - 10 / 10 - 7 x A , 3 x B

Basic model of pump for oil with max. 12 pump elements

Version
1 - 12 = number of punched outlets
1 - 12 = number of pre-installed pump elements

Number of pump elements #1 (1 to 12)
A = Pump element 0.075cm³/stroke (without metering washer)

Number of pump elements #2 (1 to 12)
B = Pump element 0.05cm³/stroke (1 metering washer)

Number of pump elements #3 (1 to 12)
C = Pump element 0.025cm³/stroke (2 metering washers)

Number of closure plugs (1 to 12)
V = Closure plug

Accessories (optional)

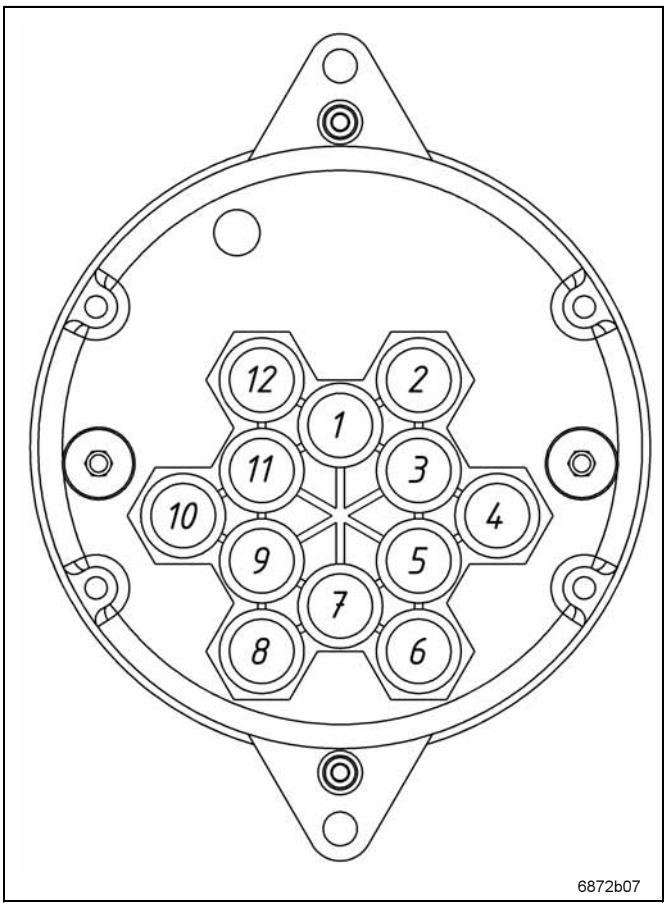

Fig. 7 Configuration of outlet positions

Number of Pump Elements	Configuration of outlet positions [1]											
	1	2	3	4	5	6	7	8	9	10	11	12
12	X	X	X	X	X	X	X	X	X	X	X	X
11	X	X	X	X	X	X	X	X	X	X	X	
10	X	X	X		X	X	X	X	X		X	X
9		X	X		X	X	X	X	X		X	X
8		X	X		X	X		X	X		X	X
7	X		X		X	X	X		X		X	
6	X		X		X		X		X		X	
5	X		X		X		X		X			
4			X		X				X		X	
3	X				X				X			
2	X						X					
1							X					

Tab. 1 MOP lube point connections

[1] condition as supplied to customer

6001a02

IMPORTANT
Output diagrams:
See Fig. 12 and 13.

Subject to modifications

LINCOLN GmbH • Postfach 1263 • D-69183 Walldorf • Tel +49 (6227) 33-0 • Fax +49 (6227) 33-259

Maintenance and Repair


1013A94

CAUTION!

Before starting any maintenance or repair work, disconnect the MOP 112 from the power supply to avoid unintended operation.

Maintenance work may be carried out by authorized and qualified personnel only.

6026b05

Fig. 8 Level control of the MOP reservoir

Maintenance

- Check the oil level of the MOP 112 reservoir in regular time intervals (approximately every 2 days) to avoid damages on the pump due to operation without oil.
- Make sure that the oil level does not fall below the minimum (Fig. 8, MIN marking)


6001a02

NOTE

If the reservoir is filled over the MAX marking, oil may overflow if ground slopes are > 20°.

IMPORTANT

CHAIN OIL ONLY!
Observe paragraph "Suitable Oils" in chapter "Technical Data".

Repair

For repair work on the MOP 112 use only original parts by Lincoln GmbH (see chapter “Spare Parts & Accessories”, page 14). Using non-Lincoln parts voids the system warranty.

Troubleshooting

Fault 1: Pump does not supply oil		
Cause:	**Remedy …**	**through operating personnel**
· Oil reservoir empty	➲ Refill reservoir and vent lines.	
Cause:	**Remedy …**	**through service personnel**
· Defective pump element	➲ Replace pump element.	

Fault 2: At the lube point(s) no oil is dispensed		
Cause:	**Remedy …**	**through service personnel**
· Leakages	➲ Check fittings and lines; retighten if necessary.	
· Lube point(s) clogged	➲ Clean brushes or felt strips.	

Fault 3: Poor or excessive lubrication		
Cause:	**Remedy …**	**through service personnel**
· Wrong metering volume	➲ Adapt metering volume accordingly (see Fig. 12 and 13): - By replacing the pump element with modified number of metering washers. - By adjusting the driving speed	

Tab. 2 Troubleshooting

LINCOLN GMBH • POSTFACH 1263 • D-69183 WALLDORF • TEL +49 (6227) 33-0 • FAX +49 (6227) 33-259

Technical Data

Rating

MOP

Driving shaft Ø ..... 8 mm
Speed range of driving shafts (see Fig. 9):
- Shaft 1 / 2 ..... 30 up to 280 min^{-1}
Ratio of driving shafts (see Fig. 9):
- Shaft 1 ..... i = 19.53
- Shaft 2 ..... i = 7.7
Max. output pressure ..... 10 bar
Admissible operating temperature ..... 0 °C to 40 °C

Reservoir

Size of reservoir ..... 5 liters
Dimensions:
- Height..... 302 mm
- Width..... 205 mm
- Depth..... 180 mm

Lines

Lubricant supply line ..... Ø 12 mm
Lubricant feed line ..... Ø 6 mm

Suitable Oils [1)]

Mineral oils..... SAE 0W-40
Biological oils ..... based on ester
Synthetic oils ..... based on ester and/or PAD

[1)] Observe with the selection of an oil the admissible operating temperature of the MOP.


1013A94

ATTENTION!

The following oils must not be used in the MOP 112:
used oils, gear oils, glycol oils and vegetable oils.

Output Volumes


6001a02

NOTE

The output of a pump element depends on the number of metering washers installed and the speed of the drive shaft (see Fig. 12 and 13).

Dimensions

MOP

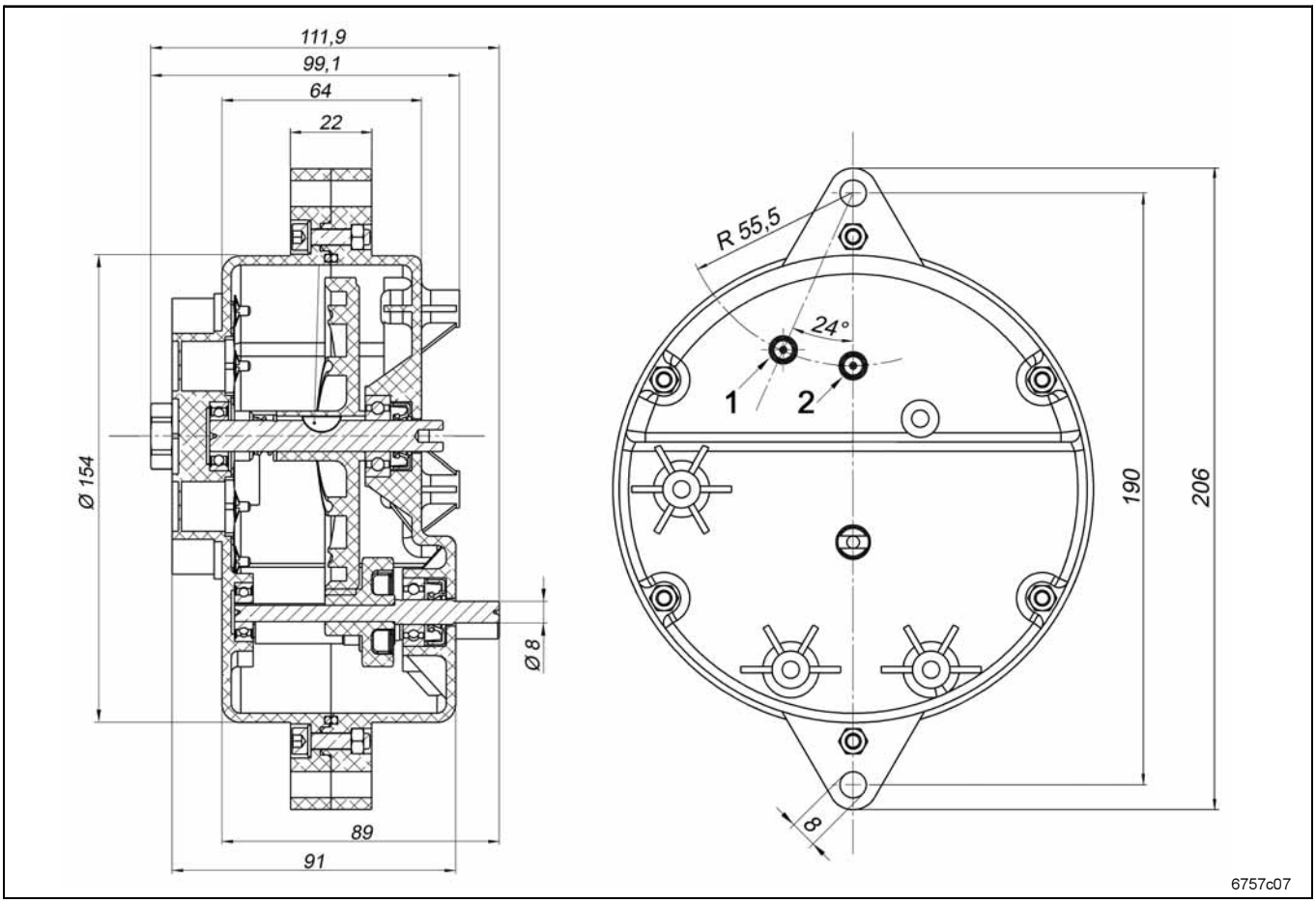

Fig. 9 Dimensions of the MOP **1** - Shaft 1 **2** - Shaft 2

Subject to modifications

LINCOLN GmbH • Postfach 1263 • D-69183 Walldorf • Tel +49 (6227) 33-0 • Fax +49 (6227) 33-259

Technical Data, continuation

Dimensions, continuation

Pump element

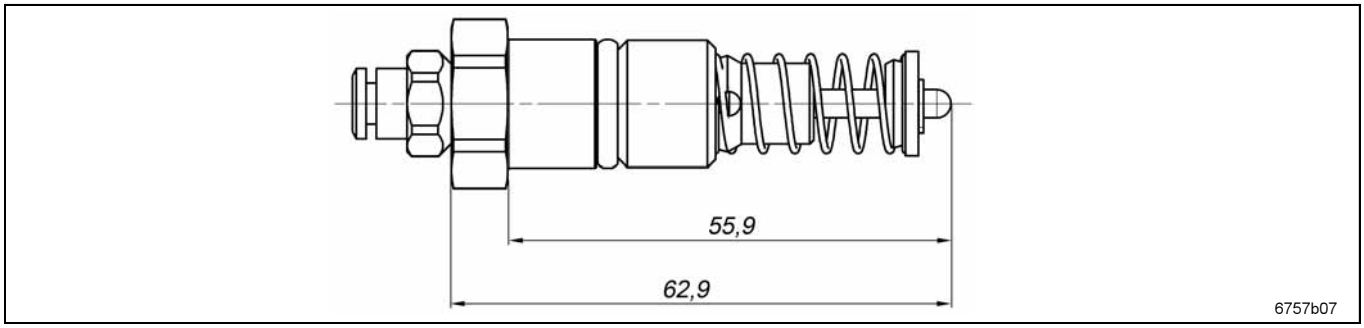

Fig. 10 Dimensions of the pump element

Reservoir

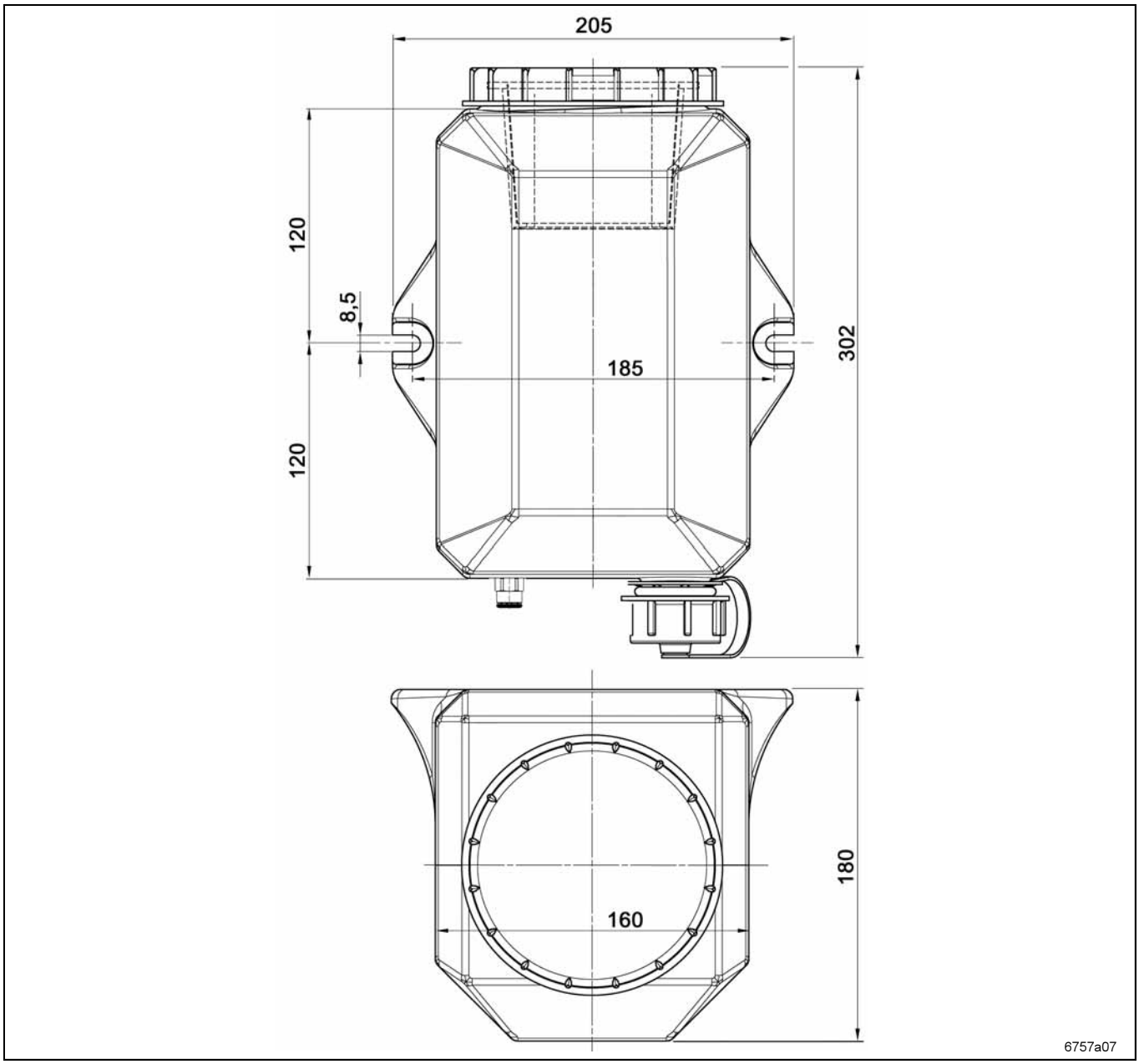

Fig. 11 Dimensions of the reservoir

LINCOLN GMBH • POSTFACH 1263 • D-69183 WALLDORF • TEL +49 (6227) 33-0 • FAX +49 (6227) 33-259

Technical Data, continuation

Output per Pump Element

With Driving Shaft 1

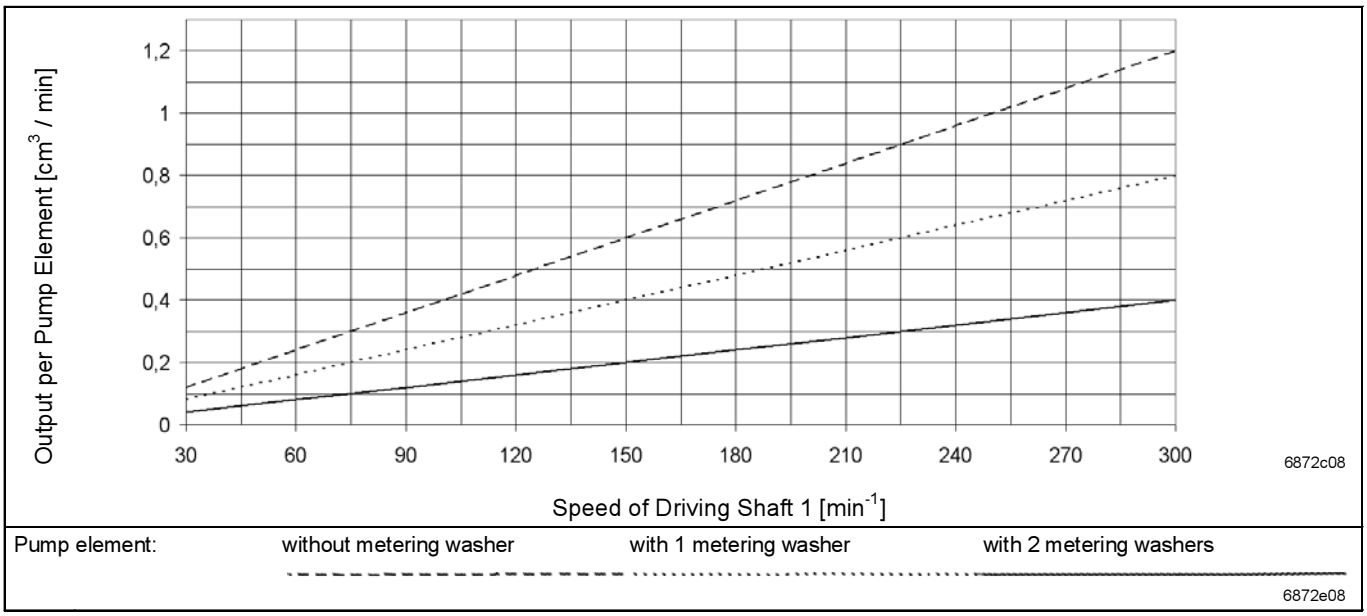

Fig. 12 Outputs per pump element with driving shaft 1, Ratio 1 : 19,53

With Driving Shaft 2

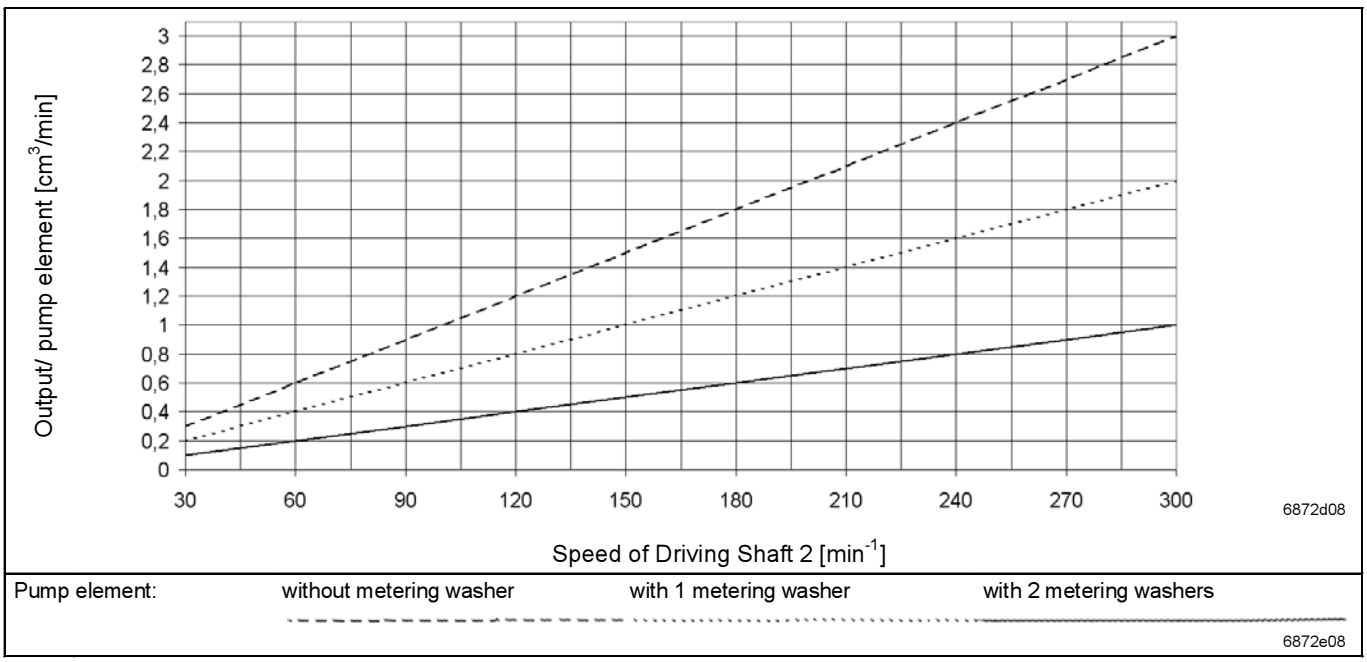

Fig. 13 Outputs per pump element with driving shaft 2, Ratio 1 : 7,7

Subject to modifications

LINCOLN GmbH • Postfach 1263 • D-69183 Walldorf • Tel +49 (6227) 33-0 • Fax +49 (6227) 33-259

Declaration by the manufacturer

D	GB	F	I
Herstellererklärung im Sinne der EG-Richtlinie Maschinen 98/37/EG, Anhang II B	**Declaration by the manufacturer as defined by machinery directive 98/37/EEC Annex II B**	**Déclaration du fabricant conformément à la directive 98/37/CEE, annexe II B**	**Dichiarazione del costruttore ai sensi della direttiva 98/37/CEE in materia di macchinari, Appendice II B**
Hiermit erklären wir, dass die Bauart von	*Herewith we declare that the supplied model of*	*Par la présente, nous déclarons que le produit ci-dessous*	*Si dichiara che il prodotto da noi fornito*

Product: *MOP 112*

in der von uns gelieferten Ausführung zum Einbau in eine Maschine bestimmt ist und dass ihre Inbetriebnahme solange untersagt ist, bis festgestellt wurde, dass die Maschine, die in das o.g. Produkt eingebaut werden soll, den Bestimmungen der oben genannten Richtlinie – einschließlich deren zum Zeitpunkt der Erklärung geltenden Änderungen – entspricht.	*is intended to be incorporated into machinery covered by this directive and must not be put into service until the machinery into which it is to be incorporated has been declared in conformity with the provisions of the above mentioned directive – including all modifications of this directive valid at the time of the declaration.*	*dans l'exécution dans laquelle nous le livrons, est destiné à être installé sur une machine, et que sa mise en service est interdite tant qu'il n'aura pas été constaté que la machine sur laquelle il sera installé est conforme aux dispositions de la directive ci-dessus, y compris les modifications qui y auront été apportées et qui seront valides à la date de la déclaration.*	*è destinato all' installazione su di un macchinario e che la sua messa in funzione non sarà autorizzata fino a quando non sarà stata accertata la conformità del macchinario, sul quale esso dovrà essere installato, in relazione alle disposizioni della direttiva 98/37/CEE – comprese tutte la rettifiche di questa direttiva al momento della dichiarazione.*
Angewendete harmonisierte Normen, insbesondere	*Applied harmonized standards in particular*	*Normes harmonisées, notamment*	*Norme armonizzate applicate in particolare*

Standards: DIN EN ISO 12100-1; DIN EN ISO 12100-2; DIN EN ISO 809

16.04.2008 ppa. Z. Paluncic

(Datum / Unterschrift)	*(date / signature)*	*(date / signature)*	*(data/firma)*

GR	E	P	NL	DK
Δηλωση του κατασκευασ του συμφ. με τις προδιαγρ αφες: 98/37/ΕΟΚ, παρ. ΙΙ Β	**Declaración del fabricante conforme con la Directiva CE sobre máquinas 98/37/CEE, Anexo II B**	**Declaração do Fabricante segundo directiva CE 98/37/CEE, Anexo II B**	**Verklaring van de fabrikant inzake de richtlijn betreffende machines, (98/37/EEG, bijlage II B)**	**Fabrikantens erklaring i henold til EF-lovgivning om maskiner 98/37/EØF bilag II b**
Δια του παροντος σας γνω–στοποιουμε, οτι το προιον	*Por la presente, declaramos que el modelo suministrado*	*Em anexo declaramos que o modelo fornecido*	*hiermede verklaren wij, dat de*	*Hermed erklares, at*

Product: *MOP 112*

προοριζεται για τοποθετηση εντος μηχανηματος, και οτι δεν επιτρεπεται να τεθει σε λειτουργια μεχρις οτου διαπιστωθει, οτι το μηχανημα εντος του οποιου προκειται να τοποθετηθει ανταποκρινεται στις προαναφερομενες ισχυουσες προ – διαγραφες (συμπεριλαμβανο–μενων των αλλαγων που ισχυ –ουν και που εγιναν στο χρον ι–κο αυτο διαστημα).	*es destinado a ser incorporado en una máquina y que su puesta en servicio está prohibida antes de que la máquina en la que vaya a ser incorporado haya sido declarada conforme a las disposiciones de la Directiva en su redacción 98/37/CEE – incluso las modificaciones de la misma vigentes a la hora de la declarción.*	*deverá ser incorporado na maquinaria coberta por esta directiva e não poderá ser colocado em serviço até a maquinaria na qual é para ser incorporado for declarada em conformidade com as provisões da directiva acima mencionada / incluindo todas as modificações desta directiva válida desde a emissão desta declaração.*	*ertoe bestemd is, ingebouwd te worden in een machine en dat een inwerkstelling verboden is, voordat vastgesteld is, dat de machine, waarin deze machine wordt ingebouwd, in overeenstemming met de bepalingen van de richtlijn 98/37/EEG – ingesloten de tot dit tijdstip geldende veranderingen van deze richtlijn - verklaard is.*	*er bestemt til inkorpoering i en maskine og at igangsætningen forbydes indtil der er konstateret, at maskinen, som skal inkorporeres i denne maskine, er bragt i overensstemmelse med alle relevante bestemmelser, samt ændringer gældende på deklarationstidspunktet.*
Προσθετα προς εφαρμογην χρησιμοποιηθησες εναρμον ισμενες προδιαγραφες	Normas armonizadas utilizadas, particularmente	Normas harmonizadas utilizadas, em particular	Gebruikte geharmoniseerde normen,namelijk	Harmoniserede standarder, der blev anvendt,i særdeleshed

Standards: DIN EN ISO 12100-1; DIN EN ISO 12100-2; DIN EN ISO 809

16.04.2008 ppa. Z. Paluncic

(ημερομηνια / υπογραφη)	*(fecha / firma)*	*(Data / assinatura)*	*(Datum/ handtekening)*	*(dato/underskrift)*

Subject to modifications

LINCOLN GMBH • POSTFACH 1263 • D-69183 WALLDORF • TEL +49 (6227) 33-0 • FAX +49 (6227) 33-259

America:	Europe/Africa:	Asia/Pacific:	
Lincoln Industrial	Lincoln GmbH	Lincoln Industrial Corporation	
One Lincoln Way	Heinrich-Hertz Straße 2-8	51 Changi Business Park Central 2	
St. Louis, MO 63120-1578	69190 Walldorf, Germany	# 09-06 The Signature	
USA	Tel: (+49) 6227 33-0	Singapore 486066	
Phone: (+1) 314 679 4200	Fax: (+49) 6227 33-259	Phone: (+65) 6588-0188	
Fax: (+1) 800 424 5359		Fax: (+65) 6588-3438	
		Email: sales@lincolnindustrial.com.sg	