ELECTRONIC LUBE METER
MODEL 905
Series "C"

GENERAL

The Electronic Preset Meter (EPM) is designed specifically to meter and dispense bulk fluids for servicing automobiles, trucks, buses, construction equipment, and similar applications. The meter is lightweight, rugged and has a comfortable grip. The meter is designed specifically to dispense motor oils (S.A.E. 5-50), gear oils (S.A.E. 80-240), automatic transmission fluid, and hydraulic fluid.

A superior rugged, shock-resistant design for demanding environments.

METER IS NOT FOR RESALE MEASUREMENT OF FLUID.

OPERATION

This unit can be programmed to dispense in quarts, liters, pints, and gallons. You can program any batch size in a matter of seconds. A 5-digit liquid crystal display, accurate to the second decimal point, shows the exact amount of fluid dispensed.

The EPM meter uses 4 replaceable AA batteries and is calibrated at the factory. The meter can also be recalibrated easily in the field.

Electronic accuracy will help you save time and money. The preset feature will allow users to perform other service tasks while fluid is dispensed.

TYPICAL APPLICATIONS

- Fleet Maintenance Shops
- Industrial Assembly
- Quick Lube Facilities
- Dealerships
- Construction and Mining Equipment
- General Automotive Service Centers
- Specialty Service and Repair Shops

IMPORTANT NOTE: The automatic nozzle requires 60 PSI to open and function properly. A pump exceeding 60 PSI is required for adequate flow and proper operation. A pump ratio of at least 3:1 is recommended.

Electronic Preset Meter

FEATURES

- Oval Gear Driven Meter
- Durable, Rugged Design
- Rubber Boot
- Large, Easy-to-Read LCD Display
- Ease of Operation
- CE Approved

- Totalization in Liters and Gallons
- Delivery in Liters, Quarts, Pints, Gallons
- Automatic Non-Drip Nozzle with manual shut-off feature
- Max. Totalizer Number: 99,999 Gallons or Liters
- Max. Dispense Volume: 99,999 Units
- Max. Preset Volume: 99.9 Units

- Calibration Factor for Different Fluids
- Changeable Units of Measure
- One Programmable Preset
- Total and Resettable Total

- Minimum 20,000 Cycles on Battery Life
- Low Battery Indicator
- Low Battery Safety Lock Out Feature
- Uses Standard AA Batteries

- In-Line Swivel Standard With All Meters
- Automatic Shut-Off at Preset Amount
- Emergency Electrical Shut-Off
- Precision Control Valve Operation

(IOM-134-01 P/N 53400-134)

Table of Contents

Operation & Features

⚠WARNING

This symbol is an alert to the possibility of serious injury or death if the instructions are not followed.

⚠CAUTION

This symbol is an alert to the possibility of damage to or destruction of equipment if the instructions are not followed.

⚠WARNING

EXPLOSION and FIRE HAZARDS

Improper grounding, poor ventilation, open flames or sparks can cause a hazardous condition and result in an explosion or fire and cause serious injury.

- Be sure the fluid system is properly grounded. See your pump instruction manual for details.
- If there is static sparking or if you feel an electric shock while using the meter, stop dispensing immediately. Identify and correct the problem before continuing.
- Provide fresh air ventilation. This will avoid the buildup of fumes from the fluid being dispensed.
- Do not smoke while dispensing flammable fluids.
- Keep the dispensing area free of debris including solvents, rags, and spilled gasoline.

⚠WARNING

METER HAZARDS

Equipment misuse can cause the meter to rupture or malfunction and cause serious injury.

- This equipment is for professional use only.
- Read all instructions, tags, and labels before operating the equipment.
- Use the equipment only for its intended purpose.
- Do **NOT** modify or alter the equipment.
- Do **NOT** leave equipment unattended while dispensing.
- Check equipment daily. Repair or replace worn or damaged parts immediately.
- Do **NOT** exceed the maximum working pressure level of the lowest rated system component.
- Use only extensions and nozzles that are designed for use with this equipment.
- Use only fluids and solvents that are compatible with the equipment. Read all fluid and solvent manufacturer's warnings.
- Tighten all fluid connections before operating this equipment.
- Do **NOT** stop or deflect leaks with hands, body, gloves, or rags.
- Do **NOT** dispense towards any person or any part of the body.
- Do **NOT** place hands or fingers over the end of or into the dispense valve.
- Comply with all local, state, and federal fire, electrical, and safety regulations.
- Use of this product in a manner other than specified in this manual may result in impaired operation or damage to equipment.

⚠WARNING

- This meter is designed specifically to dispense petroleum products.

  Do not use for windshield wiper fluid, brake fluid, or water based solutions.

METER BUTTONS

Meter Display

10 1 0.1

Used to enter the batch quantity to be dispensed.

Total TOTAL

Used to display the accumulated total of fluid dispensed as well as the re-settable total during Auto Batch and Manual Mode.

Auto AUTO

Used to enter and exit the Manual or Auto Batch mode.

Reset RESET

- Used in the Manual Mode to clear the dispensed quantity.
- Used in Auto Batch Mode to clear the dispensed quantity and reset the meter for the next batch.
- Used to reset the resettable total dispensed while pressing the TOTAL button.

Shut-Off or Stop

Used to stop the flow through an Emergency Override.

LCD DISPLAY

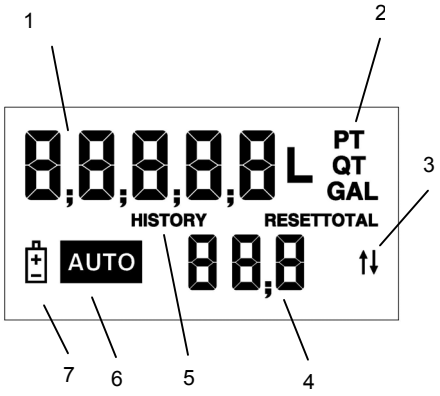

LCD Display

1. Displays re-settable total, accumulated total, and Scale Factor
2. Displays Unit of Measure
3. Arrows - **Not Used On This Version**
4. Preset Batch quantity
5. History Icon – **Not Used On This Version**
6. AUTO is an indicator of the meter being in Auto Batch mode
7. Low Battery icon

METER INSTALLATION

Relieve System Pressure

1. Turn off the power supply to the pump or close the shutoff valve.
2. Dispense any fluid in the system into a waste container by opening the meter(s).
3. Open all bleed-type master air valves and fluid meter(s) in the system.
4. Leave the meter(s) open until ready to pressurize the system.

⚠WARNING

Pressurized Equipment

This equipment stays pressurized until the pressure is manually relieved. To reduce the risk of injury from fluid spray from the meter, follow the Pressure Relief Procedures when you:

- Are instructed to relieve pressure
- Stop dispensing
- Check, clean, or service any system equipment
- Clean or install nozzles

Grounding

1. Grounding reduces the risk of static sparking. Ground all system components according to local, state, and federal codes. Consult the pump user's manual and other system components to ground the following:
2. Pump: follow manufacturer's recommendations.
3. Air and Fluid Hoses: use only grounded hoses.
4. Air Compressor: follow manufacturers recommendations.
5. Fluid Supply Container: follow the local code.

⚠WARNING

Explosion and Fire

Movement of fluids through the dispensing system creates static electricity. Static electricity can cause volatile fumes resulting in an explosion and fire. The dispensing system must be grounded.

Flushing Procedure

NOTE: *If the system has multiple dispense positions, begin at the position farthest from the pump and move toward the pump.*

⚠CAUTION

If this installation is new or if the fluid in the lines is contaminated, flush the system before installing the meter(s).

1. Close fluid dispense valves at every position.
2. Once the main fluid outlet valve at the pump is closed, the air pressure to the pump motor is properly adjusted and the air valve is opened.
3. Slowly open the main fluid valve.
4. Place the hose end in a waste container. Make sure hose is secure so no fluid leaks during flushing.
5. Slowly open the dispense valve and allow enough oil to pass through it to ensure that the system is clean.
6. Close the valve and repeat for all dispense positions.

Apply Meter to Hose

Close the drain valve before starting this procedure.

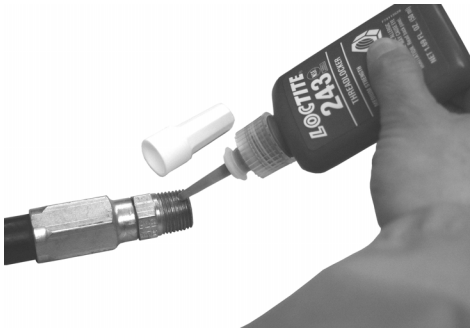

1. Attach swivel to meter. Apply thread sealant to the male end of the hose. Recommended sealant is Loctite® 243.

2. Insert the metal end of the hose into the swivel. Tighten completely with an open ended, adjustable, wrench.

NOTE: *The threaded end of the meter always has female threads. The metal end of the hose must have male threads.*

Apply thread sealant, Loctite® 243 or equivalent, to the male end.

The inlet and outlet swivel connections are either 1/2" NPT or 1/2" BSPP, depending on meter model.

Attach the hose

Apply Nozzle to Meter

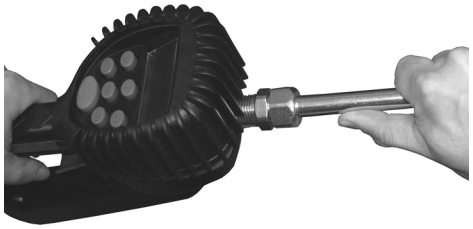

1. On the opposite end, apply sealant to the end of the nozzle. Recommended sealant is Loctite® 243.

Attach the Nozzle

2. Thread the nozzle onto the meter. Screw it in tightly with an open ended, adjustable, wrench.
3. Open all dispense position shut-off valves. Start the pump to pressurize the system.
4. Before use, to ensure accuracy, purge all air from the fluid lines and dispense valve(s).

METER OPERATION

NOTE: *The keypad Auto button is used to toggle between Manual Mode and Auto Batch Mode.*

Manual Mode

In the Manual Mode the meter operates as a free flow dispensing handle.

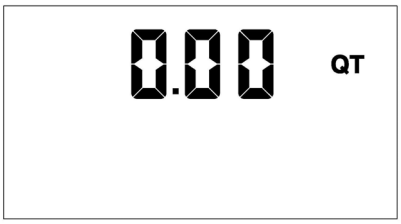

Manual Mode

1. Pull the trigger to begin the flow.
2. The display shows the amount of fluid dispensed.
3. When the desired amount of fluid has been dispensed, release the trigger to stop the flow.
4. Press the RESET button **once** to reset the counter display to zero.

Auto Batch Mode

To enter the Auto Batch Mode from the Manual Mode press the AUTO button. When in the Auto Batch Mode the AUTO icon displays and the batch quantity shows in the lower, right hand side of the LCD display.

1. Change the batch size by pressing the 10, 1 and/or 0.1 buttons.
   a) Press the 10 button to increase the batch amount in increments of 10 units.
   b) Press the 1 button to increase the batch amount in increments of 1 unit.
   c) Press the 0.1 button to increase the batch amount in increments of 0.1 units.

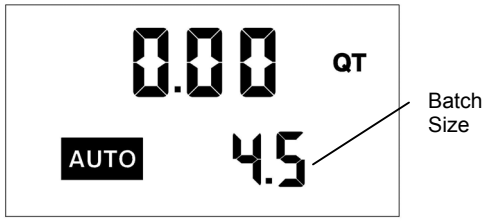

Auto Batch Mode

2. Pull the trigger to begin the flow.
   - The solenoid valve automatically locks the dispensing valve in the full open position.

⚠CAUTION
The meter always locks in the maximum open position.

3. Release the trigger, allowing it to fall back.

4. The flow automatically shuts off after the batch quantity has dispensed.

5. After the batch quantity has been dispensed the meter is a free flow-dispensing handle until the reset button is depressed.
   - To top off the fluid, pull the trigger to begin the flow and release it when the desired amount has been pumped.

NOTE: *In case of an emergency or to interrupt a batch, the meter is equipped with an Emergency Override. (See Emergency Override)*

6. Press the RESET button when finished. The display resets and the meter is now ready for the next batch to be dispensed.

OPERATING MODE FUNCTIONS

These functions operate the same in Manual Mode and Auto Batch Mode.

Re-settable/Accumulated Totals

The meter has two flow totalizers. One is Re-settable Total. The other is Accumulated Total.

1. To see the Accumulated Total and the Re-settable Total:
   - Press and **hold** the TOTAL button to see the Accumulated Total.
   - Continue holding the TOTAL button.
   - After three (3) seconds the display changes to the Re-settable Total.

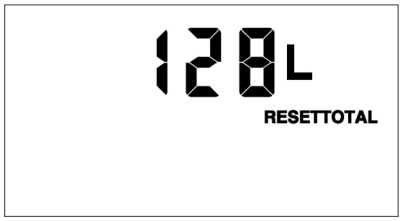

Re-settable Total

2. Resettotal displays the total fluid dispensed since the Re-settable Total was last set back to zero.
3. Press the RESET button while viewing Resettotal to set it back to zero.
4. Release the TOTAL button to return to the operating display.

NOTE: *The Accumulated Total cannot be reset unless the user changes from English units to metric units or from metric to English units. (See Change Factory Settings, Change Unit of Measure).*

Emergency Override

In case of an emergency or to interrupt a batch, the meter is equipped with an Emergency Override.

1. Press the red button on the meter to activate the Emergency Override. The override closes the valve, immediately stopping fluid flow.
2. After an Emergency Override, batching can continue by pulling up on the trigger.

Error Code

SF0 (Scale Factor 0) The Scale Factor setting for the meter is 0.000.

- You must set a non-zero value to properly measure fluid being dispensed.
- To input a valid Scale Factor for the meter follow the instructions in the “Change Factory Settings” section of this manual.

SERVICE

Low Battery Icon

When the batteries need changing a progression of warnings appears on the meter screen.

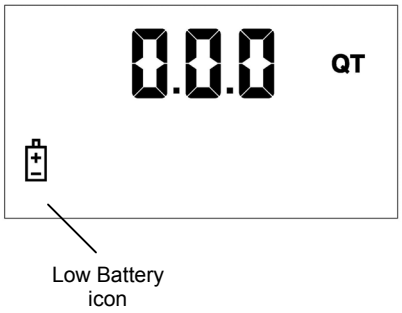

First Warning: the Low Battery icon appears in the lower left corner of the display. That means the batteries are low and need to be changed.

Second Warning: Battery icon flashes. The battery power is too low and meter functions are disabled.

Changing the Batteries

The battery compartment is located in the lower case on the underside of the trigger guard.

1. Turn the unit over.
2. Unscrew the two screws. Remove the battery door to expose the batteries.
3. Replace the old batteries. The meter takes 4 AA, alkaline, batteries.

NOTE: *Battery polarity markings are inside battery compartment.*

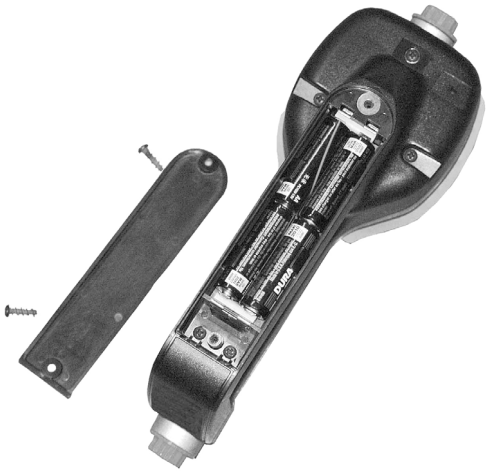

4. Dispose of used batteries properly, according to local regulations.

NOTE: *Changing the batteries does <u>not</u> affect any of the programmed values or totals.*

CHANGE FACTORY SETTINGS

Each meter is calibrated at the factory for use with motor oil (see Change Scale Factor). The Unit of Measure is also selected prior to shipment.

Programming

To change the factory settings:

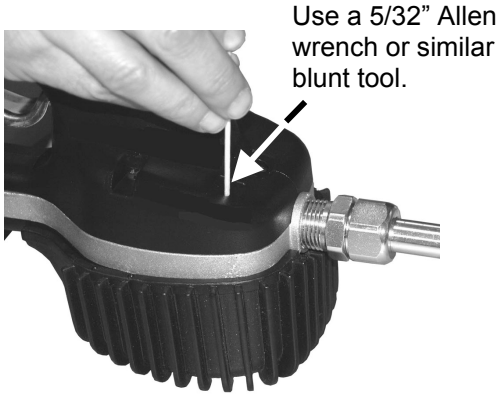

Location of access hole for PROGRAMMING Key

1. Press the RESET button to wake up the meter if the display is blank.
2. To enter the Programming mode turn the unit over. Press and hold down the **"PROGRAMMING"** key located in the access hole for 2 seconds (see picture on left).
3. After the display flashes, the Unit of Measurement and Scale Factor are displayed.
4. The current Unit of Measurement will be flashing when the programming mode has been entered.

Change Unit of Measure

The meter comes with an option to choose 4 different Units of Measure.

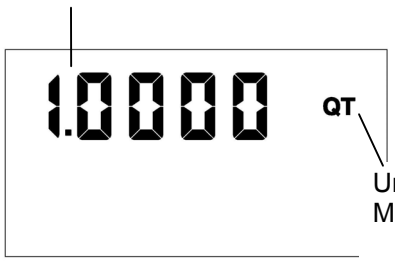

Programming Display

1. The actual Unit of Measure is flashing when the Programming Mode is entered.
2. Press the TOTAL button to toggle between the four options; PT, QT, GAL, L.
3. When the desired unit of measure is displayed, press the RESET button. The Unit of Measure icon stops flashing.
4. If L, (Liters), is selected, the decimal point begins to flash.
   - You now have the option to change the decimal point to either a period or a comma.
   - To do this, press the TOTAL button.
5. If no Scale Factor changes are necessary, go to Save Changes.

⚠CAUTION

Changing the Unit of Measurement from metric to English or from English to metric clears the Re-settable Total and Accumulated Total.

Change Scale Factor

⚠WARNING

Changing the Scale Factor changes the accuracy of the meter, potentially causing it to overfill or under fill. This has the potential to cause a mechanical breakdown.

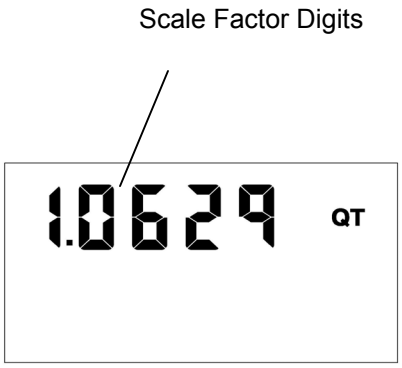

Scale Factor Display

1. Press the RESET button to advance through the Scale Factor digits.
2. Press the TOTAL button to change the selected number.

NOTE: *All digits can be scrolled between 0 and 9 except the first. It can only be scrolled from 0 to 1 or from 1 to 0.*

3. Press the RESET button to advance to the next number in Scale Factor.
4. Repeat steps 2 and 3 for all five digits in Scale Factor.

Save Changes

When you are finished programming these options, turn the unit over and press the **PROGRAMMING** key.

1. Hold the **PROGRAMMING** key until the display flashes three times and goes blank.
2. Press the RESET button to turn the meter display on.

Verify Changes

1. Verify Unit of Measure is correct.
2. Push and hold the Total button and Auto button together, to verify that the Scale Factor is correct.

CALCULATE SCALE FACTOR

A Scale Factor is a number used to adjust meter accuracy. The Scale Factor is set at the factory using motor oil with a viscosity of 10W.

The primary use for Scale Factor recalibration is to batch fluids with different viscosities. If the fluid has a lower viscosity, more fluid can slip past the meter gears without being detected. Changing the Scale Factor adjusts the meter to compensate for the loss.

The meter multiplies each pulse by the Scale Factor number to correct the accuracy when it converts to the specified units. The reading is then always correct.

For an approximate Scale Factor for fluids of different viscosities, consult the scale factor chart.

NOTE: *The meter's original Scale Factor was written on the trigger when it was calibrated at the factory. It may have been revised after field installation. Use the Scale Factor showing on the display, not on the trigger.*

⚠WARNING

Changing the Scale Factor will change the accuracy of the meter, potentially causing it to overfill or under fill. This has the potential to cause a mechanical breakdown.

To view the current Scale Factor:

1. Press and hold the TOTAL button and the AUTO button at the same time.

Absolute Scale Factor

For absolute Scale Factor, perform this test:

1. Run a measured amount of fluid through the meter.
2. If the meter delivers 4.20 quarts and the display shows only 4.00 quarts, then the Scale Factor needs to be adjusted.
3. Divide what the meter delivered (4.20) by what the display shows (4.00). You get an error factor of (1.05).
4. The existing Scale Factor is 1.0123, as shown in steps 1 and 2 in "To view the current Scale Factor", above.
5. To calculate a new factor: 1.0123 (existing Scale Factor) x 1.05 (error factor) = 1.0629 (new Scale Factor).
6. Enter that number as described in Change Scale Factor.

NOTE: *Use the Scale Factor showing on the display, not on the trigger.*

Chart of Approximate Scale Factors for Fluids of Different Viscosities

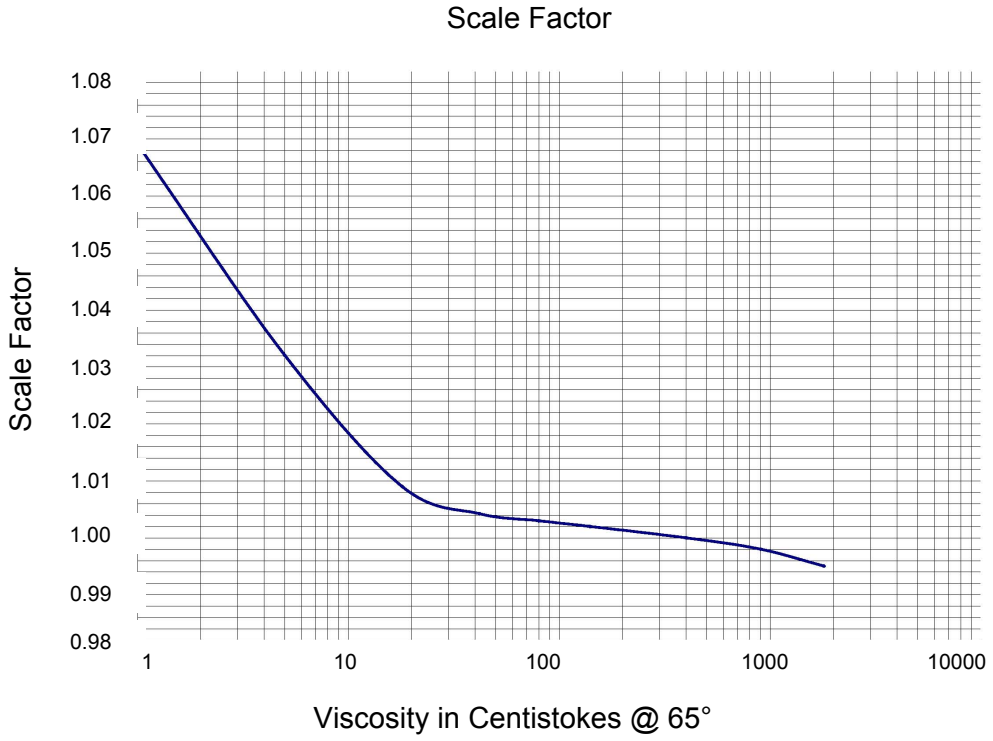

Samples of Fluids, Viscosities, and Scale Factors

Fluid	Viscosity	Scale Factor
Anti-Freeze	18	1.007
ATF	80	1.002
10W	140	1.000
80W-90	450	0.999
140W	1800	0.993

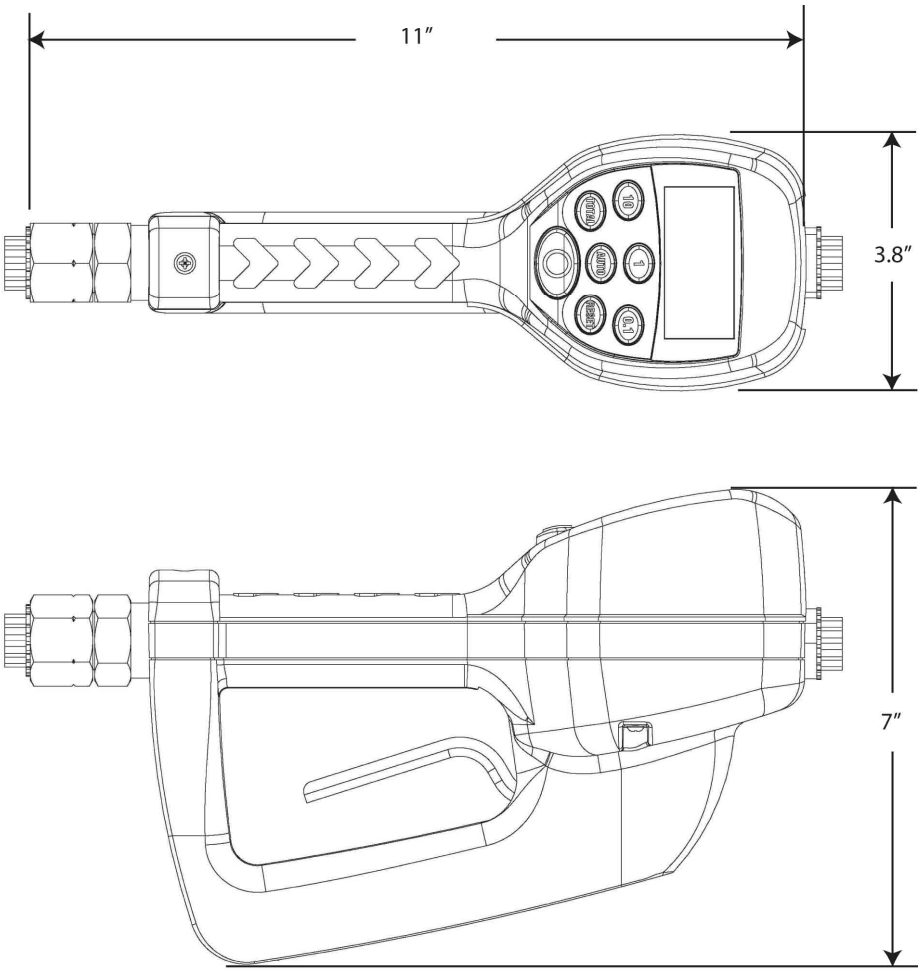

SPECIFICATIONS

	English	Metric
Maximum Flow *	10 gpm	38 lpm
Minimum Flow *	0.25 gpm	1 lpm
Operating Pressure (Maximum)	1000 psi	67 bar
Operating Pressure (Minimum)	5 psi	.35 bar
Operating Temperature (Maximum)	120° F	50° C
Operating Temperature (Minimum)	20° F	- 5° C
Accuracy - Oils	+/- 0.5%	+/- 0.5%
Accuracy - Anti-freeze	+/- 1.5%	+/- 1.5%
5-Digit LCD Display	Quarts, Pints, Gallons	Liters
Inlet and Outlet Connections	½” NPT	½” BSPP

Min.-Max. flow range will vary with fluid viscosity.

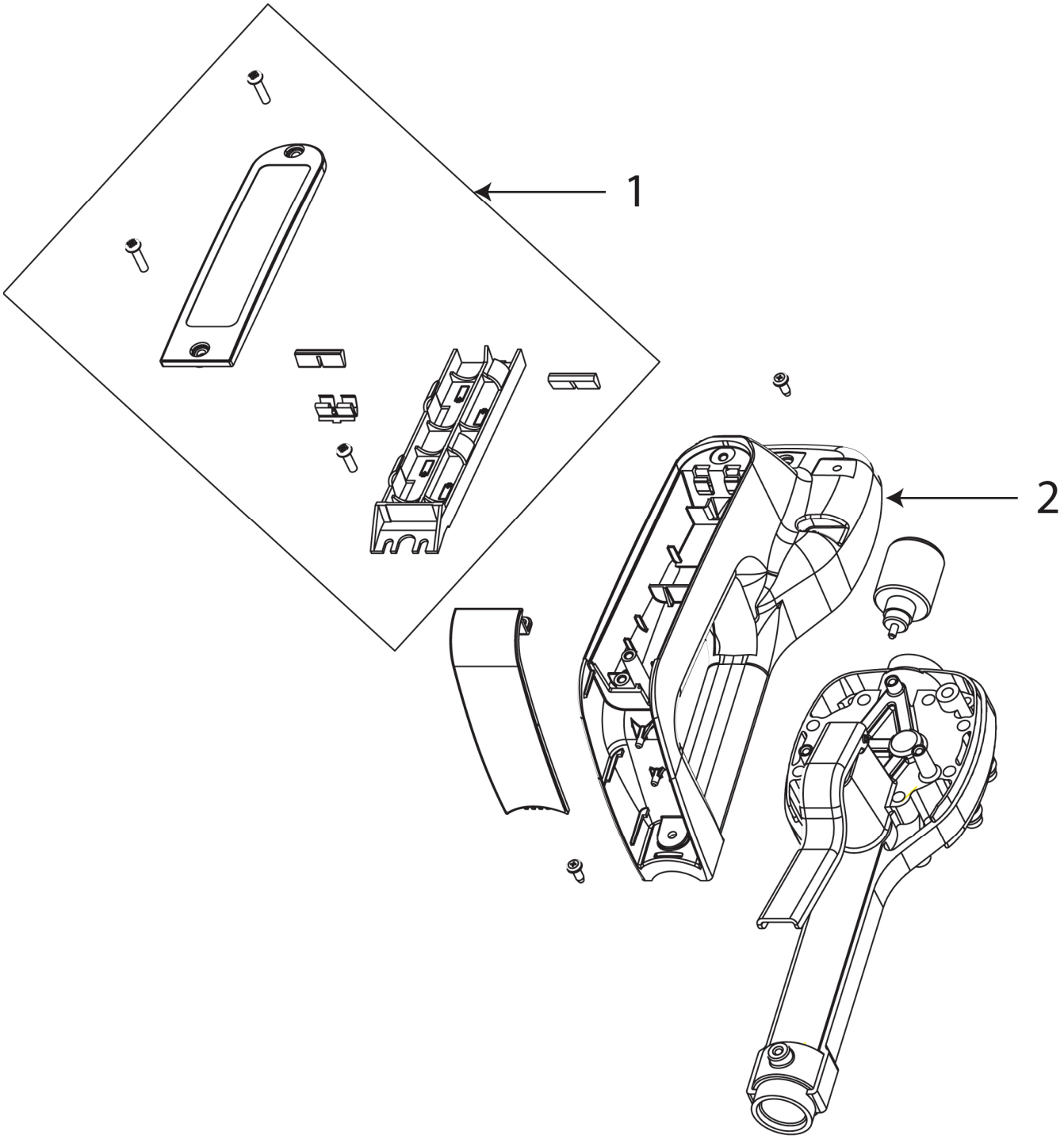

ITEM #	PART DESCRIPTION	PART NUMBER
1	Battery Holder Assembly	274607
2	Bottom Case with Screws	272384

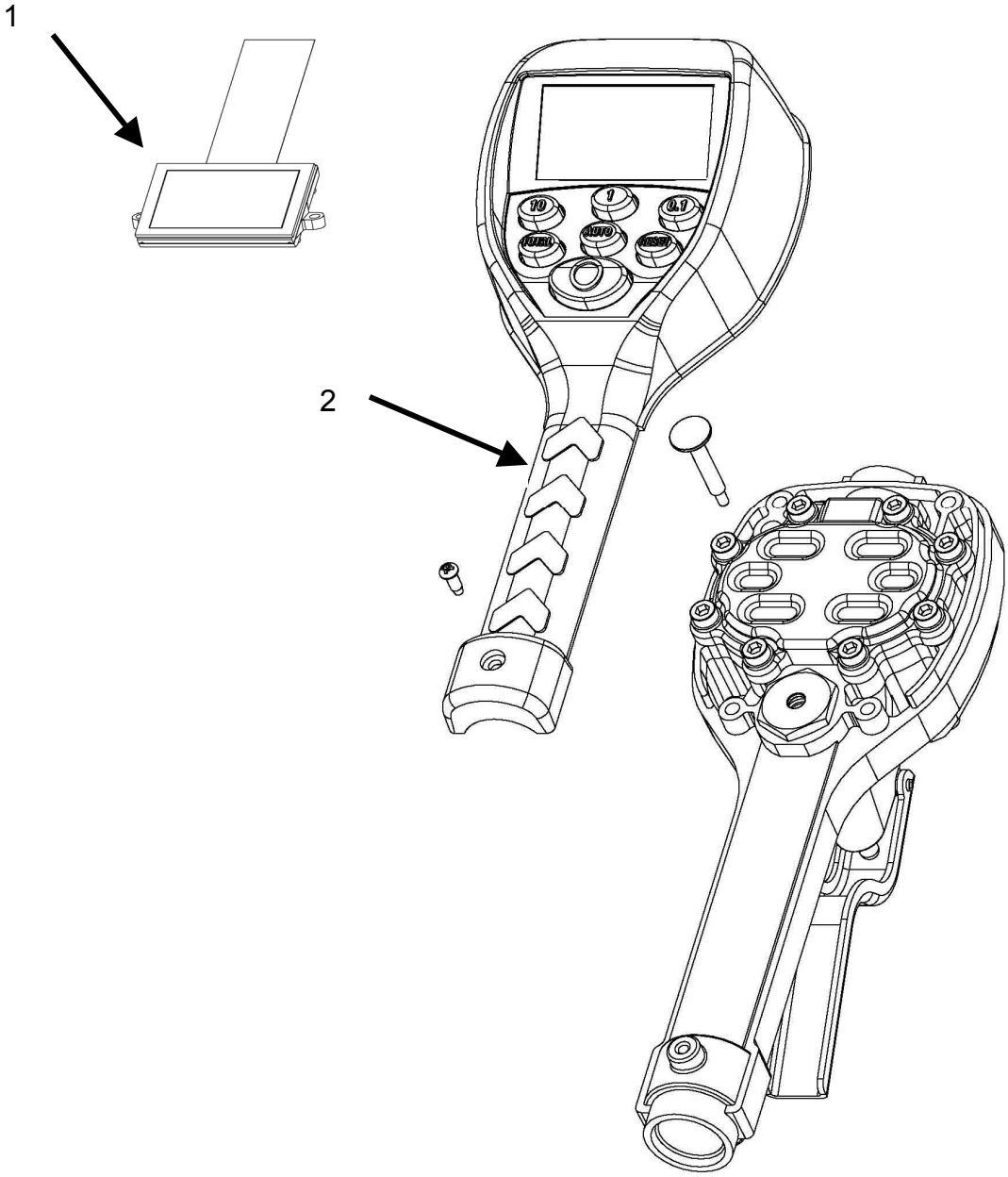

ITEM #	PART DESCRIPTION	PART NUMBER
1	Display Assembly	274610
2	EPM2 Std. Register Assembly	274631
Not Shown	Swivel, NPT	272397
Not Shown	Rubber Boot	274609

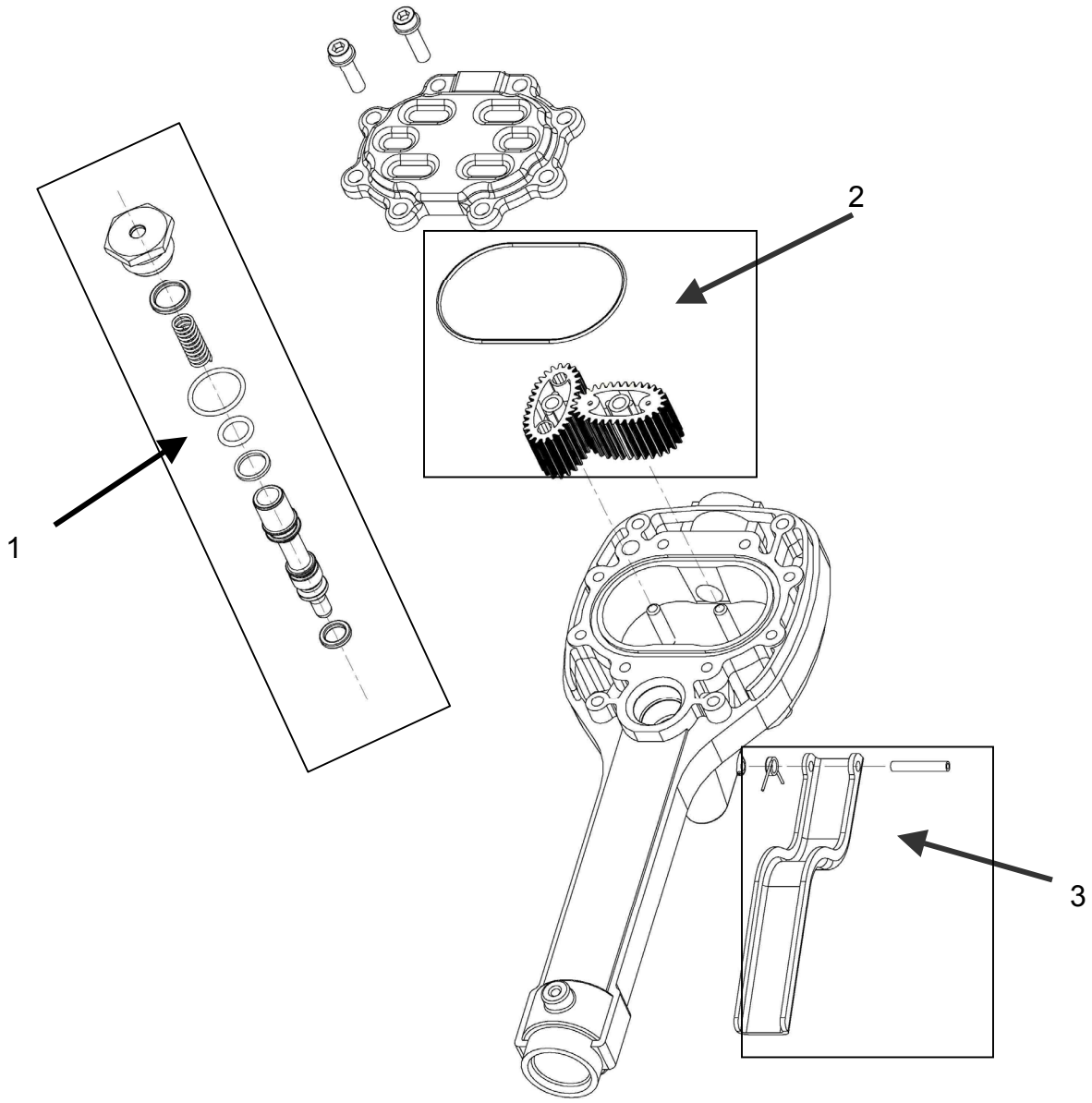

ITEM #	PART DESCRIPTION	PART NUMBER
1	Valve Assembly	272373
2	Gear Service Kit with O-Ring	272377
3	Trigger Assembly	272378

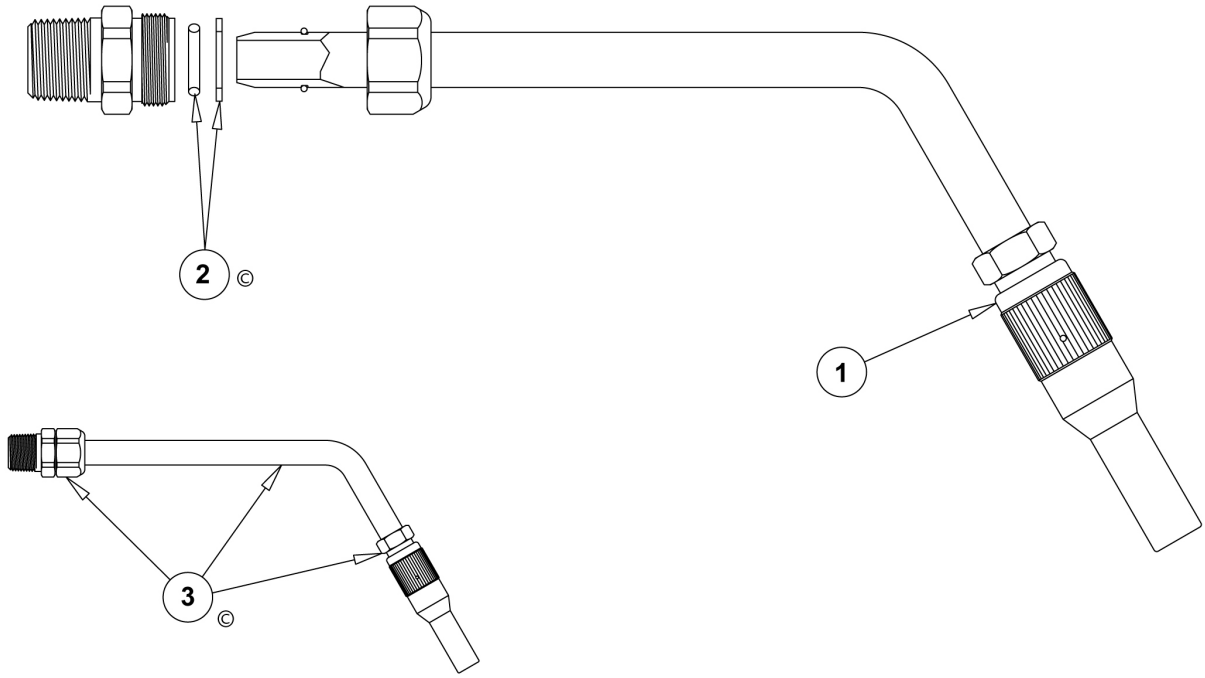

ITEM #	PART DESCRIPTION	PART NUMBER
1	Non-Drip Nozzle Assembly	84799
2	O-Ring and Washer Kit	272390
3	Nozzle Assembly**	272391

** Consists of Items 1 and 2

TROUBLESHOOTING

WARNING

Relieve the pressure prior to checking or repairing the meter. Make sure all valves, controls and pumps are operating correctly.

Symptom	Possible Cause	Remedy
Battery Icon is displayed	Batteries are low	Replace batteries
Display Blank	Meter asleep	Push reset button
	Batteries dead	Replace batteries / Push reset Button
	Program error	Remove and reinsert battery pack/ Push reset button
	Loose battery connection	Remove battery pack and check battery connection / Push reset button
Meter does not latch for batching	Meter not in AUTO mode	Press AUTO button and program batch size
	Meter not reset after prior batch	Press RESET button
	Low batteries	Check for battery icon / replace batteries / push RESET button
Slow or no fluid flow	Filter is clogged	Clean or replace the filter in the swivel nut
	Pump pressure is low	Turn up the pump pressure
	Foreign material is jamming meter	Contact your local distributor for repair
Meter inaccurate	Scale factor not correct for fluid	Enter program mode, check and reset program factor

Lincoln Industrial Standard Warranty

LIMITED WARRANTY

Lincoln warrants the equipment manufactured and supplied by Lincoln to be free from defects in material and workmanship for a period of one (1) year following the date of purchase, excluding there from any special, extended, or limited warranty published by Lincoln. If equipment is determined to be defective during this warranty period, it will be repaired or replaced, within Lincoln's sole discretion, without charge.

This warranty is conditioned upon the determination of a Lincoln authorized representative that the equipment is defective. To obtain repair or replacement, you must ship the equipment, transportation charges prepaid, with proof of purchase to a Lincoln Authorized Warranty and Service Center within the warranty period.

This warranty is extended to the original retail purchaser only. This warranty does not apply to equipment damaged from accident, overload, abuse, misuse, negligence, faulty installation or abrasive or corrosive material, equipment that has been altered, or equipment repaired by anyone not authorized by Lincoln. This warranty applies only to equipment installed, operated and maintained in strict accordance with the written specifications and recommendations provided by Lincoln or its authorized field personnel.

THIS WARRANTY IS EXCLUSIVE AND IS IN LIEU OF ANY OTHER WARRANTIES, EXPRESS OR IMPLIED, INCLUDING, BUT NO LIMITED TO, THE WARRANTY OF MERCHANTIBILITY OR WARRANTY OF FITNESS FOR A PARTICULAR PURPOSE.

In no event shall Lincoln be liable for incidental or consequential damages. Lincoln's liability for any claim for loss or damages arising out of the sale, resale or use of any Lincoln equipment shall in no event exceed the purchase price. Some jurisdictions do not allow the exclusion or limitation of incidental or consequential damages, therefore the above limitation or exclusion may not apply to you.

This warranty gives you specific legal rights. You may also have other rights that vary by jurisdiction.

Customers not located in the Western Hemisphere or East Asia: Please contact Lincoln GmbH & Co. KG, Walldorf, Germany, for your warranty rights.

Americas
One Lincoln Way
St. Louis, MO 63120-1578
USA
Phone +1 314 679 4200
Fax +1 800 424 5359

Europe/Africa
Heinrich-Hertz-Str 2-8
D-69183 Walldorf
Germany
Phone +49 6227 33 0
Fax +49 6227 33 259

Asia/Pacific
51 Changi Business Park
Central 2
#09-06 The Signature
Singapore 486066
Phone +65 6588 0188
Fax +65 6588 3438

Printed in USA

Website
www.lincolnindustrial.com

FORM 403596

FEBRUARY 2006