LINCOLN

Operation, assembly, disassembly and troubleshooting guide

FlowMaster II rotary driven 24 V DC electric pump, series “A”

85747, 5 U.S. gallons
85748, 5 U.S. gallons
85749, 120 lbs.

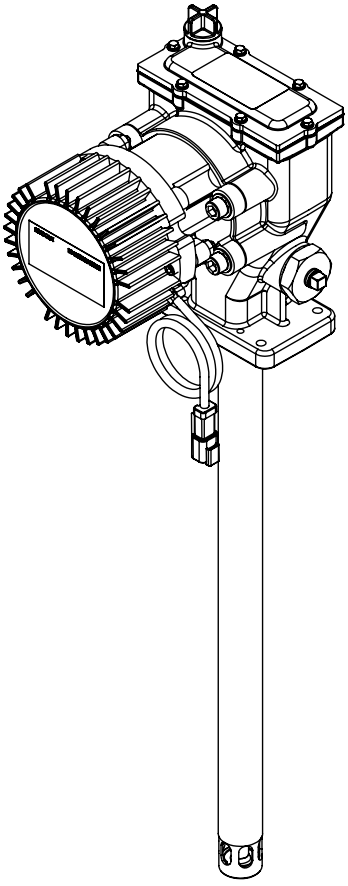

Date of issue	**July 2014**
Form number	**404439B**
Section	**C8**
Page	**363B**

⚠ DANGER

Read manual prior to installation or use of this product. Keep manual nearby for future reference. Failure to follow instructions and safety precautions may result in death or serious injury.

SKF

Contents

Safety

Read and carefully observe these installation instructions before installing, operating or troubleshooting the assembly. The assembly must be installed, maintained and repaired exclusively by persons familiar with the instructions.

Install the assembly only after safety instructions and this guide have been read and are completely understood.

Adequate personal protection must be used to prevent splashing of material on the skin or in the eyes.

Always disconnect power source (electricity, air or hydraulic) from the pump when it is not being used.

This equipment generates very high grease pressure. Extreme caution should be used when operating this equipment as material leaks from loose or ruptured components can inject fluid through the skin and into the body. If any fluid appears to penetrate the skin, seek attention from a doctor immediately.

Do not treat injury as a simple cut. Tell attending doctor exactly what type of fluid was injected.

Any other use not in accordance with instructions will result in loss of claim for warranty or liability.

- Do not misuse, over-pressurize, modify parts, use incompatible chemicals, fluids, or use worn and/or damaged parts.
- Do not exceed the stated maximum working pressure of the pump or of the lowest rated component in your system.
- Always read and follow the fluid manufacturer's recommendations regarding fluid compatibility, and the use of protective clothing and equipment.
- Failure to comply may result in personal injury and/or damage to equipment.

Explanation of signal words for safety

⚠

This is the safety alert symbol. It is used to alert you to potential physical injury hazards. Obey all safety messages that follow this symbol to avoid possible injury or death.

⚠ SAFETY INSTRUCTIONS

Safety instruction signs indicate specific safety-related instructions or procedures.

⚠ DANGER

Indicates a hazardous situation which if not avoided will result in death or serious injury.

⚠ WARNING

Indicates a hazardous situation which, if not avoided will result in death or serious injury.

⚠ CAUTION

Indicates a hazardous situation which, if not avoided, could result in minor or moderate injury.

Use of this manual

Overview

This manual details the procedure that must be followed while installing, operating, troubleshooting and repairing the FlowMaster II rotary driven 24 V DC electric pump.

All required parts, tools, and equipment needed to complete the operation of the FlowMaster II rotary driven 24 V DC electric pump are defined and listed within this manual.

Review of the parts list and nomenclature is recommended before starting disassembly or operation.

Appropriate use

All pump models are exclusively designed to pump and dispense lubricants using electric power. The specifications are shown in **table 1** for the pump. The maximum specification ratings should not be exceeded.

Any other use not in accordance with instructions will result in loss of claims for warranty and liability.

General description and information

The Lincoln industrial rotary 24 V DC electric pump uses a 24 V DC motor and either a single or two stage planetary gear drive. Grease output is proportional to the pump revolutions per minute. The pump is primarily designed for centralized lubrication systems such as the single line parallel, single line progressive and two line systems.

The pump is driven by the rotary motion of the electric motor. Rotary motion is converted to reciprocating motion through an eccentric crank mechanism. The reciprocating action causes the pump cylinder to move up and down. The unit is a positive displacement double-acting pump as grease output occurs during both the up and down stroke. The pump motor employs an integral speed control capable of reducing pump speed to 10% of its maximum value.

During the down stroke, the pump cylinder is extended into the grease. Through the combination of shovel action and vacuum generated in the pump cylinder chamber, the grease is forced into the pump cylinder. Simultaneously, grease is discharged through the outlet of the pump. The volume of grease during intake is twice the amount of grease output during one cycle. During the upstroke, the inlet check closes, and one half of the grease taken in during the previous stroke is transferred through the outlet check and discharged to the outlet port. Typical output of the pump is shown in **table 2**.

Table 3 lists each model of the electrical pump in this manual with their associated gear ratio to pump speed.

Fig. 1 is the electrical wiring schematic for the pump with a controller and **fig. 2** is the electrical wiring schematic for the pump without a controller.

Inspection

If over pressurizing of the equipment is believed to have occurred, contact the factory authorized warranty and service center nearest you for inspection of the pump.
Specialized equipment and knowledge is required for repair of this pump.

Annual inspection by the factory authorized warranty and service center nearest you is recommended.

Damaged Pumps

Do not use any pump that appears to be damaged, badly worn or operates abnormally. Remove the pump from service and contact the factory authorized warranty and service center nearest you for repairs.

A listing of authorized warranty and service centers is available upon request.

Table 3

Gear ratio to pump speed

Model	Gear ratio	Pump speed r/min.
85747	17.8:1	10–100
85748	34:1	5–50
85749	34:1	5–50

Table 1

Pump specifications

Operating temperature	–40 to 150 °F *(–40 to 65 °C)*
Operating voltage	24 (min. 18, max. 32) V DC
Motor, power	1/3 HP *(0,25 kW)*
Current draw	→ **table 4** and **5**
Output/pump cycle	0.07 in.^{3} *(1,15 cm^3)*
Pump performance	→ **table 2**
Pump outlets	1/4 NPTF internal

[1] Motor controller will shut motor off when outside of voltage limits.

Table 2

Electric pump output

Temperature	50 r/min.	100 r/min.
°F (°C)	in.^{3}/min. *(cm^3/min.)*	
80 *(27)*	3.5 *(57)*	7 *(114)*
40 *(4)*	3.5 *(57)*	7 *(114)*
20 *(–7)*	3 *(49)*	6 *(98)*
0 *(–18)*	3 *(49)*	6 *(98)*
–10 *(–23)*	2.5 *(49)*	5 *(81)*

Test conducted with Alvania NLGI #2 grade grease at 1,000 psi *(68 bar)* back pressure

Fig. 1

Pump with controller

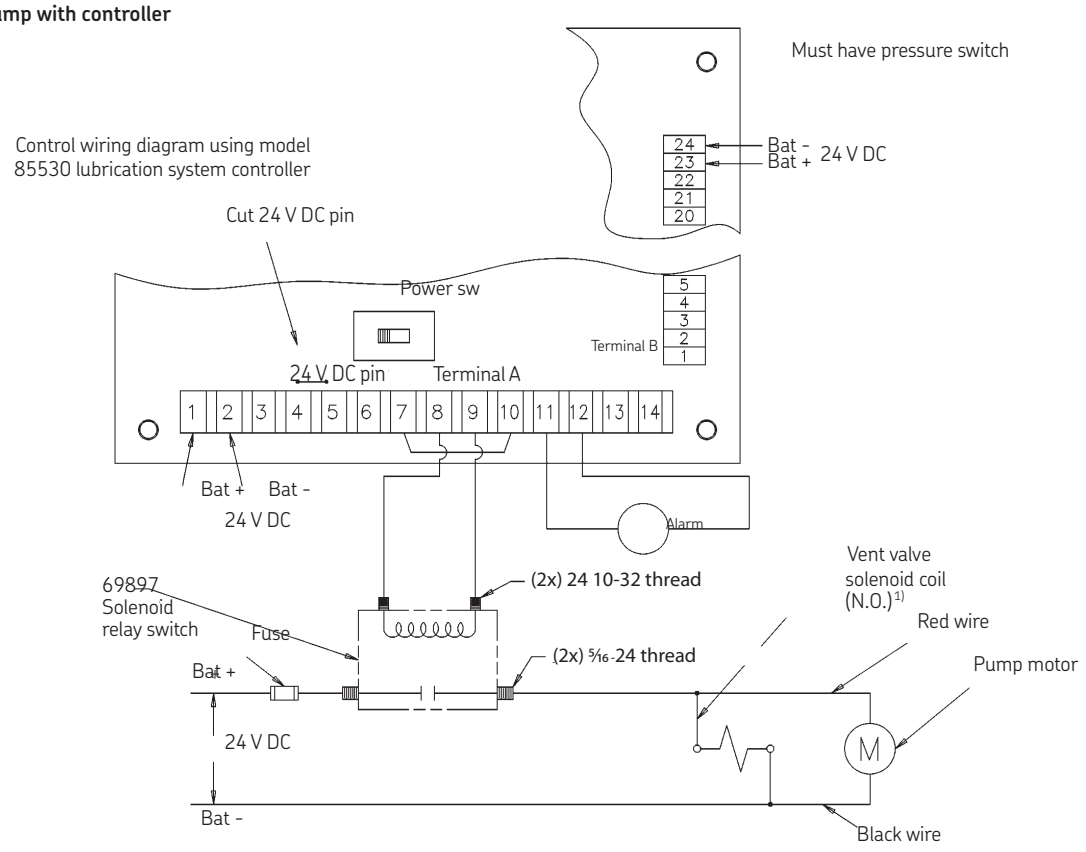

1) If a third wire is present (green/yellow) it can be clipped and removed it is not necessary for a ground wire.

Fig. 2

Pump without controller

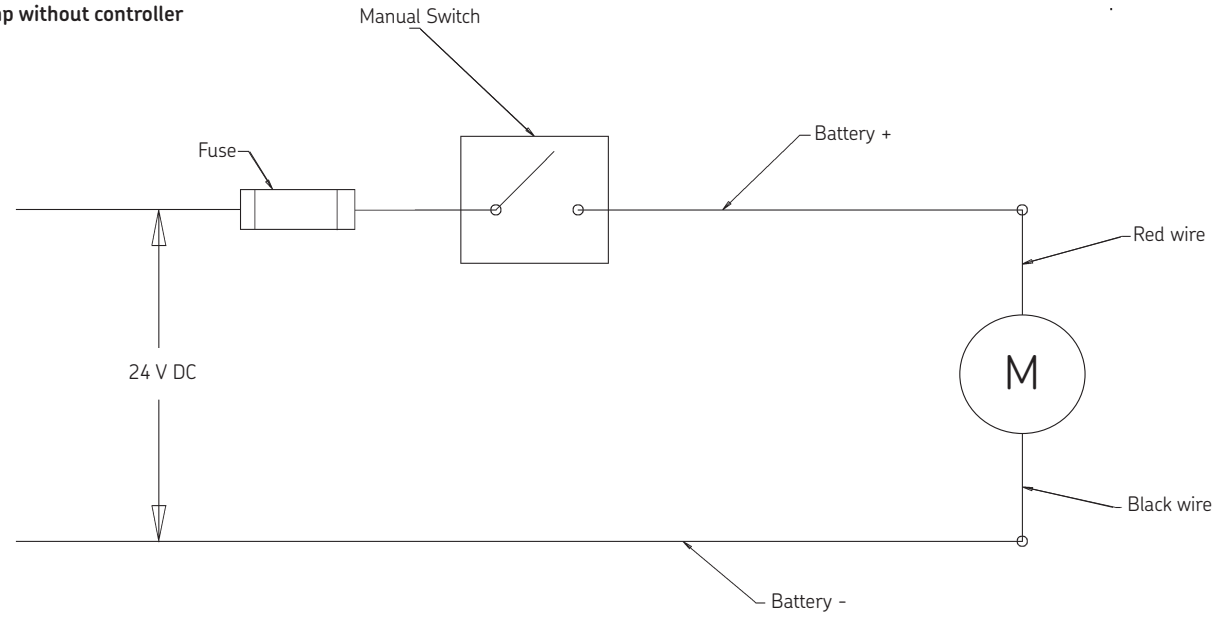

Note: Be sure to connect red motor lead to the positive side of the circuit. The motor is polarity sensitive and will not run if improperly wired.

Fig. 3

Pump dimensions

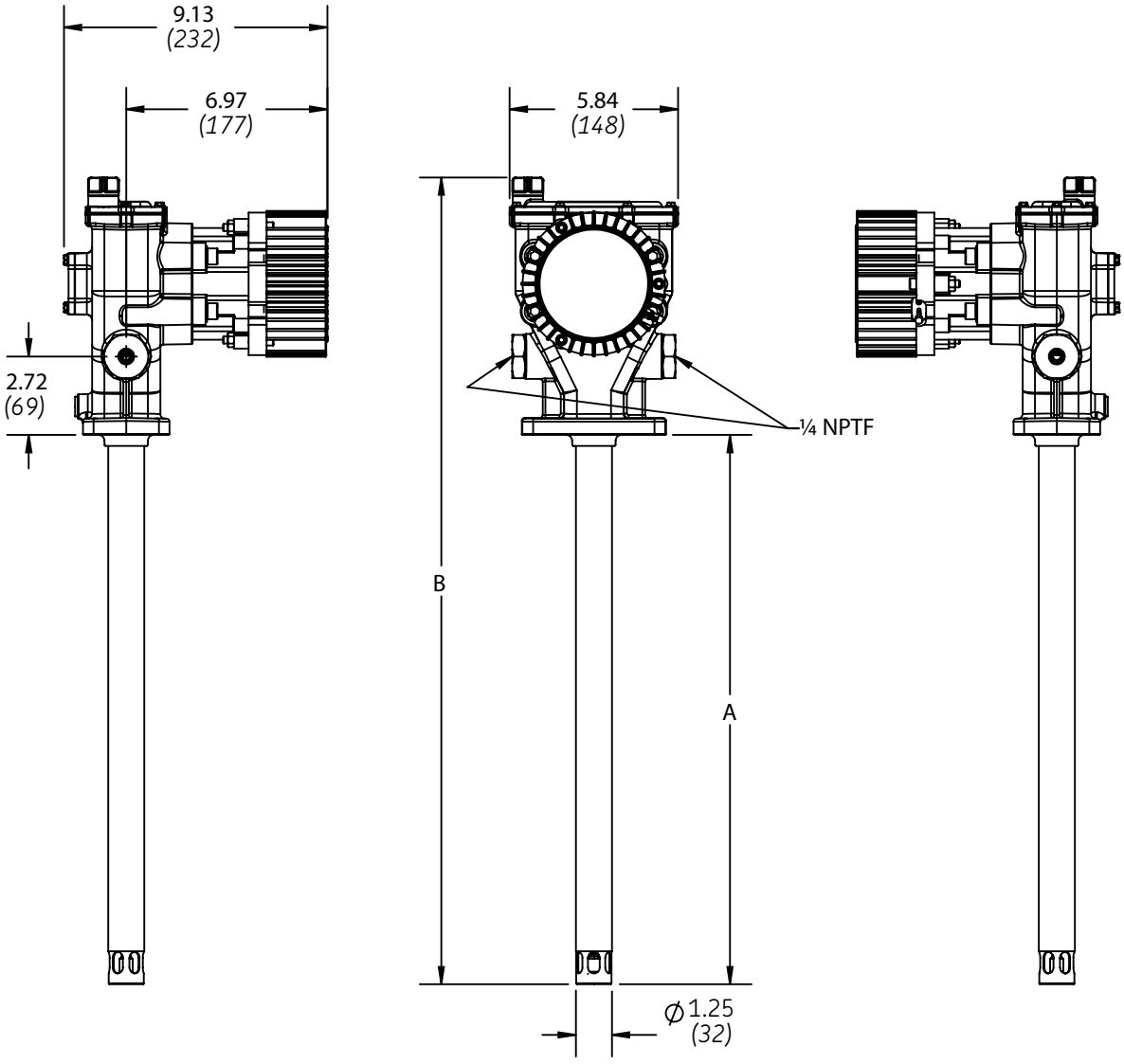

Dimensions

Model	Dimension "A" in. *(mm)*	Dimension "B" in. *(mm)*
85747	13.74 *(349)*	22.67 *(576)*
85748	13.74 *(349)*	22.67 *(576)*
85749	27.56 *(700)*	36.49 *(927)*

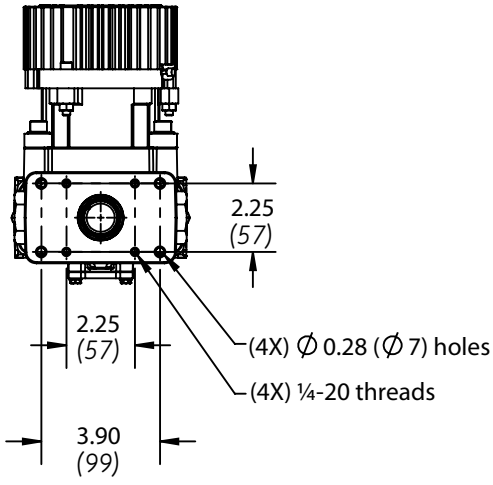

Installing the Pump

The pump was tested in lightweight oil which was left in to protect the pump from corrosion. Flush the pump before connecting it to the system to prevent contamination of the grease with residual oil.

1 Mount the pump securely on the drum cover so that it cannot move or vibrate during operation. Refer to **fig. 4**.
2 Connect material supply line to the pump outlet (**55**).

⚠ DANGER

Prior to connecting electrical wiring, perform lock out/tag out of system. Failure to comply may result in personal injury and/or damage to equipment.

Notice
If it is necessary to drill mounting holes into reservoir cover, refer to **fig. 3**, **page 6** for hole pattern and dimensions.

3 Install a safety unloader (**77**) in the open outlet port.

Notice
Refer to **fig. 1**, **page 5** if system has a controller. Refer to **fig. 2**, **page 5** if system does not have a controller.

4 Install high pressure shut-off valve in the material supply line (required).

Notice
Connect the red motor lead to the positive side of the circuit. Motor is polarity sensitive and will not run if not properly connected.

5 Refer to **fig. 1**, **page 5** and **fig. 2**, **page 5** to wire the pump motor and vent valve (if used).

Fig. 4

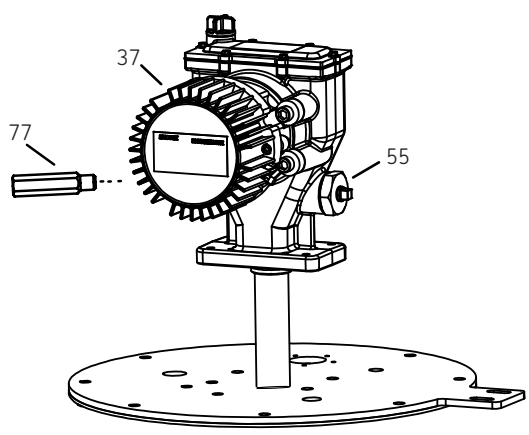

Table 4

Model 85747

24 V DC 17.8:1 gear ratio, 2 stage

Back pressure		current
psi *(bar)*	r/min.	A[1)]
0 *(0)*	107	1.28
1,000 *(68)*	105	2.00
2,000 *(137)*	103	2.75
2,500 *(172)*	100	3.20

[1)] Fuse for 5 A

6 Fuse the motor as recommended in **table 4** for model 85747. For models 85748 and 85749, refer to **table 5**.
7 Connect power to the motor leads.

Table 5

Models 85748 and 85749

24 V DC 34:1 gear ratio, 2 stage

Back pressure		current
psi *(bar)*	r/min.	A[1)]
0 *(0)*	58.2	1.16
1,000 *(68)*	57.6	1.57
2,000 *(137)*	57.0	2.10
3,000 *(206)*	56.5	2.62
4,000 *(275)*	55.9	3.20
5,000 *(344)*	55.4	4.20

[1)] Fuse for 6 A

Operation

⚠ WARNING

Always install a relief valve in the pump outlet to insure pump pressure remains below 5,000 psi *(345 bar)*. Use only high pressure components. Failure to comply may result in serious personal injury.

Priming the pump

1 Remove the pump outlet line from the outlet port (**55**).

Notice
Never allow the pump to run dry of lubricant. A dry pump quickly speeds up, creating friction heat, which can damage the seals. Monitor supply lubricant level and refill when necessary. Failure to comply may result in damage to equipment.

2 With the pump in a full container of lubricant, energize the pump.
3 Purge air from the pump.
4 Verify lubricant is flowing evenly from the pump.
5 Stop the pump.
6 Attach the pump outlet line to the outlet port (**55**).

End of procedure

Setting pump speed

1 Refer to **fig. 5** and remove the speed adjustment hex socket head *(3 mm)* cover screw.
2 Using a 0.10 in. wide x 0.025 in. thick tipped screwdriver, adjust the screw counter-clockwise to reduce pump speed.

Notice
The motor used in the 24 V DC FlowMaster II pump is equipped with a built in speed control. The pump speed is factory set to the maximum setting, but is easily changed in the field.

Speed adjustment screw is located under a cover screw, 120° away from power cord.

Notice
Speed adjustment screw has no stop and has a total of 30 turns.

Do not reduce motor speed below 200 r/min. Refer to **table 2**, **page 4** for speed recommendations.

Fig. 5

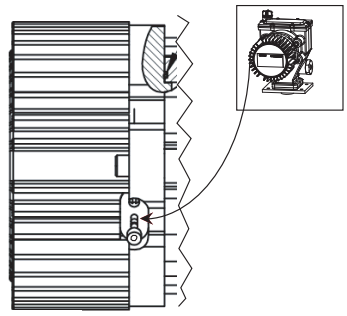

3 Install the speed adjustment hex socket head *(3 mm)* cover screw.

End of procedure

Crankcase oil service interval

- Check the oil level after every 750 hours of machine operation, or monthly.
- Change the oil after every 2,000 hours of machine operation or every year.
- Use SAE 10W30 motor oil in all units used in an ambient temperature of –40 to 150 °F *(–40 to 65°C)*. For ambient temperatures of –70 to 50 °F *(–56 to 10 °C)* , use Mobil Aero HFA low temperature oil.
- Oil level should be at indicating dot on dipstick (middle of crankshaft).
- Use 10W30 motor oil 15 oz. *(0,44 l)*.

Notice
All pumps are set to run at full speed. Do not change pump settings until after start up procedure. Failure to comply may result in damage to pump.

⚠ DANGER

Pumps are not equipped with a high pressure shut off valve. Do not exceed maximum rated outlet pressure. Failure to comply may result in personal injury and/or damage to equipment.

Disassembly

Pump

1 Place pump into a vise.
2 Remove the dipstick (**31**).
3 Drain crankcase oil from the crankcase.
4 Remove the housing cover screws (**33**) (→ **fig. 6**).
5 Remove the housing cover (**35**) and gasket (**36**).
6 Loosen and remove the three jam nuts (**74**) from the electric motor (**66**) (→ **fig. 6**).
7 Remove the electric motor (**66**) mounting screws (**64**) with lock washers (**65**).
8 Remove the electric motor (**66**).
9 Using a pick, remove the motor o-ring (**73**).

Fig. 6

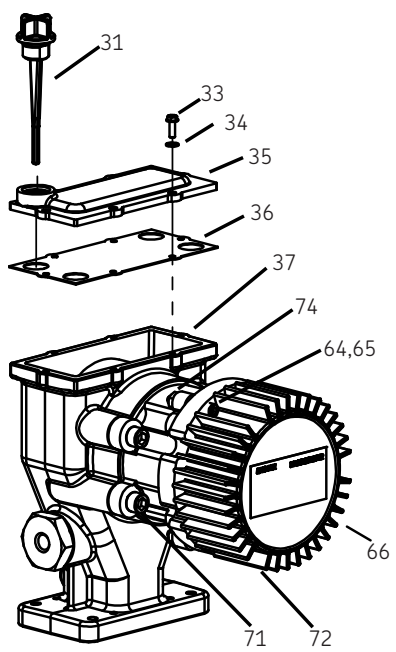

10 Refer to **fig. 7** and using a hex head wrench, remove the gear box mounting screws (**71**) and washers (**72**) and remove the gear box (**76**).
11 Loosen and remove the screws (**67**) holding the first stage gear set (**68**), spacer (**69**) and final stage gear set (**70**) in place.
12 Remove the first stage gear set (**68**), spacer (**69**) and final stage gear set (**70**) from the gear box.
13 Remove the shaft adapter (**75**).
14 Using a pick, remove the gear box o-ring (**38**).
15 Loosen the screws (**44**) holding the shaft cover (**46**) on the pump housing (**37**) (→ **fig. 8**).
16 Remove the retaining ring (**48**) from the pump shaft (**40**).

Fig. 7

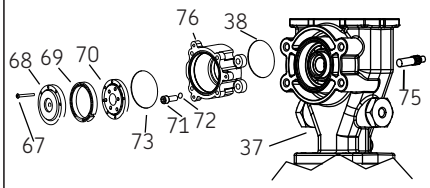

17 Remove the pump shaft (**40**) by pushing the pump shaft on the retaining ring (**48**) side.
18 Remove the retaining ring (**63**) from the housing tube (**60**). Refer to **fig. 9**.
19 Remove the shovel plug (**62**) from the housing tube (**60**).
20 Remove the spiral retaining ring (**61**).
21 Loosen and remove the tube housing (**60**) (→ **fig. 9**).
22 Remove the bronze bearing (**56**) from the tube housing (**60**).

Notice
Slight force may be necessary to remove the eccentric (**5**) and crank rod (**7**) from the housing (**37**).

Fig. 8

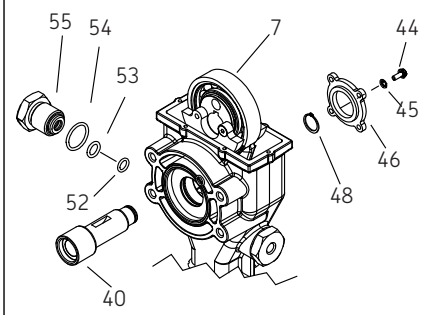

Fig. 9

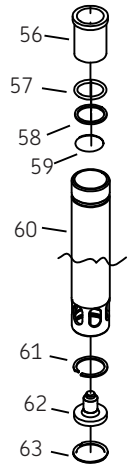

23 Using a flat, blunt tool, remove the o-ring (**57**) from the tube housing (**60**).
24 Remove the back up washer (**58**) from the tube housing (**60**).
25 Using a flat, blunt tool, remove the o-ring (**59**) from the tube housing (**60**).
26 Using a rubber mallet and piece of brass or other suitable piece of soft metal, tap on the crank rod (**7**) inside the housing (**37**).
27 Pull the eccentric (**5**) and crank rod (**7**) out of the top of the pump housing (**37**).

End of procedure

Crankrod and eccentric

1 Remove pivot screws (**11**) from the crankrod (**7**) (→ **fig. 10**).

> **Notice**
> Wrist pin bushings (**12**) often stick in wrist pin anchor (**13**). It may be necessary to use a 5/16–24 bolt from kit (276275) to remove the wrist pin bushings (**12**).

Fig. 10

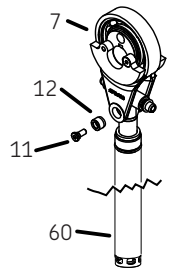

2 Using a 5/16-24 bolt, press out wrist pin bushing (**12**).
3 Remove crank rod (**7**).
4 Refer to **fig. 11** and remove the wrist pin anchor (**13**) from reciprocating tube (**25**).
5 Pull the cup seal (**16**) out of the wrist pin anchor (**13**).
6 Remove the steel backup ring (**17**).
7 Place the plunger link rod (**20**) in a vise.
8 Using an open ended wrench, loosen the plunger link rod (**20**) and remove from outlet pin (**8**).
9 Remove the plunger link rod (**20**).
10 Remove the retainer clip (**19**) from the plunger link rod (**20**).
11 Using a blunt tool, remove the o-ring (**18**) from the plunger link rod (**20**).
12 Remove the back up washer (**15**) from the plunger link rod (**20**).
13 Remove the o-ring (**14**) from the plunger tube (**10**).
14 With the crank rod in a vise and using the special tool (**T1**) provided in tool kit, remove the plunger link rod (**20**) (→ **fig. 12**).
15 Place the end of the plunger link rod (**20**) into the hole of the special tool (**T1**).
16 Align the outlet hole of the plunger link rod (**20**) with the hole in the special tool (**T1**) (→ **fig. 12**).

Fig. 12

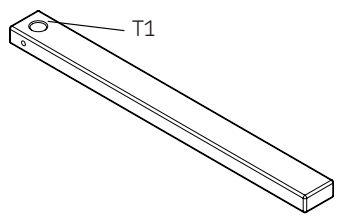

Fig. 11

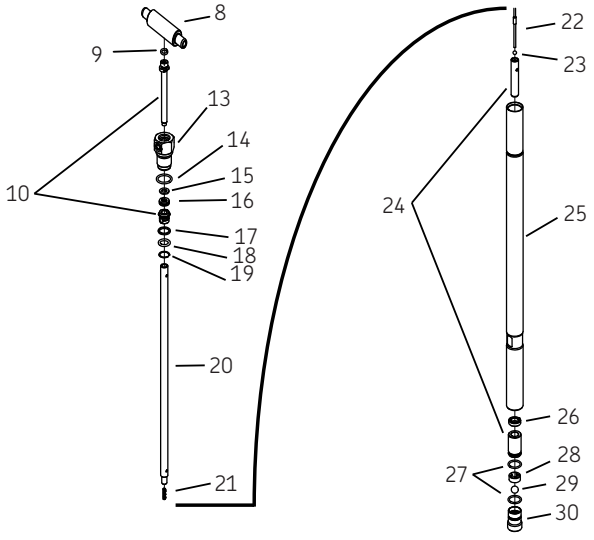

17 Insert the pin included in the tool kit (275996) through the tool and into the plunger link rod (**20**) outlet hole.
18 Turn the tool counter clockwise to remove the lower bushing and plunger (**24**) from the plunger link rod (**20**).
19 Remove the plunger (**24**).
20 Remove the check rod from (**22**) the lower bushing and plunger (**24**).
21 Remove the ball (**23**) from the lower bushing and plunger (**24**).
22 Remove the spring (**21**) from the link rod (**20**).

End of procedure

Reciprocating tube

1 Loosen the check seat housing (**30**) with 3/8 in. hex head wrench (→ **fig. 13**).
2 Remove the check seat housing (**30**) from the reciprocating tube (**25**).
3 Remove the ball cage (**28**), check ball (**29**) and o-ring seals (**27**) from the check seat housing (**30**).
4 Remove the lower bushing (**24**) from the reciprocating tube (**25**).
5 Remove the lower cup seal (**26**) from the reciprocating tube (**25**).

Crankrod

1 Using a hex head wrench, loosen and remove the flat head screws (**1**) from the eccentric (**5**) (→ **fig. 14**).
2 Remove the counterbalance weights (**2**).
3 Remove the outer (**3**) and inner (**4**) retaining ring from both sides of the crank rod (**7**).
4 Place the crank rod (**7**) on the supplied 2 1/2 in. *(63,5 mm)* diameter steel pipe.
5 Drive the crank eccentric (**5**) out of the ball bearing (**6**).
6 Drive the ball bearing (**6**) out of the crank rod (**7**).

End of procedure

Fig. 13

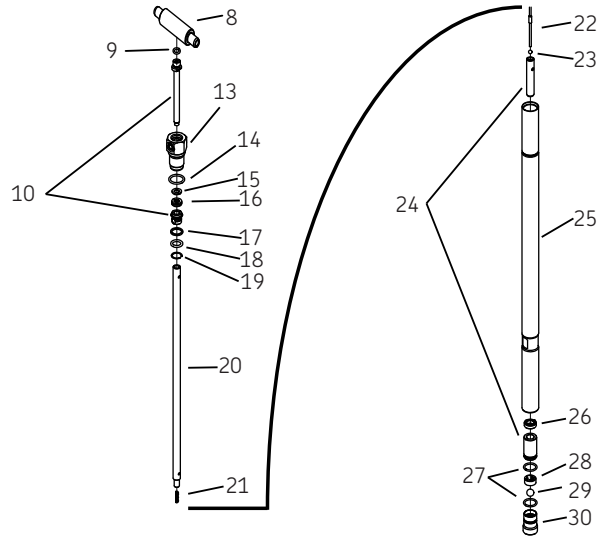

Fig. 14

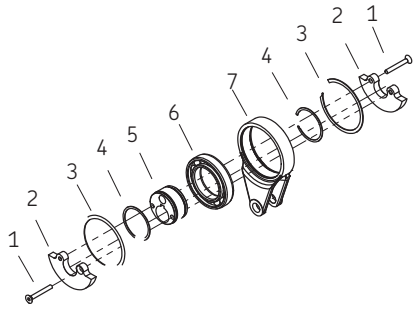

Assembly

Crankrod and eccentric assembly

1 Place the crankrod (**7**) on the 2 1/2 in. *(63,5 mm)* diameter steel pipe from the kit.
2 Refer to **fig. 15** and install the ball bearing assembly (**6**) into the crank rod (**7**).
3 Place the eccentric (**5**) in the ball bearing (**6**).
4 Place one end of the inner retaining ring (**4**) on top of the eccentric (**5**).
5 Squeeze the other end of the retaining ring (**4**) toward the center and slide the retaining ring (**4**) into place.
6 Place one end of the outer retaining ring (**3**) on top of the inner retaining ring (**4**).
7 Squeeze the other end of the retaining ring (**4**) toward the center and slide the retaining ring (**4**) into place.
8 Align the holes of the counter-balance weights (**2**) with the threaded holes of the eccentric (**5**) and place on the eccentric (**5**).
9 Insert the flat head screws (**1**) into the counter-balance weight (**2**) and torque the flat head screws (**1**) to a torque of 100–110 in.lbf. *(11,3–12,4 Nm)*.

Pump

1 Install the ball (**23**) into the lower bushing and plunger (**24**) (→ **fig. 16**).
2 Insert the check rod (**22**) into the pump plunger (**23**).
3 Place the spring (**21**) onto the check rod **(22)**.
4 Thread the plunger link rod (**20**) into the pump plunger (**24**).
5 Insert the lower bushing pump plunger (**24**) into the tool **(T1)**.
6 Refer to **fig. 17** and align the hole in the lower bushing pump plunger (**24**) with the hole in the supplied tool (**T1**).
7 Insert the pin into the hole of the tool (**T1**) and into the lower bushing pump plunger (**24**).
8 Torque the lower bushing pump plunger (**24**) to a torque of 110–125 in.lbf. *(12,4–14,1 Nm)*.
9 Install the steel back up ring (**17**) onto the threads of the upper bushing and the plunger end (**10**).
10 Slide the o-ring (**18**) onto the upper bushing and plunger end (**10**).
11 Install the retaining clip (**19**) on the upper bushing and plunger end (**10**).
12 Install the o-ring (**9**) on the upper bushing and plunger end (**10**).
13 Place the outlet pin (**8**) into a vise.
14 Apply Loctite 242 to the threads of the upper bushing and plunger end (**10**).
15 Thread the upper bushing and plunger end (**10**) into the outlet pin (**8**).

Fig. 17

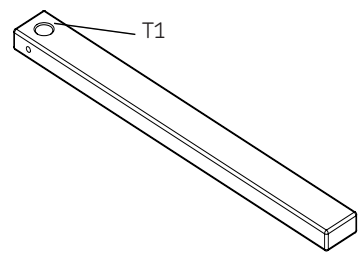

16 Torque to 110–125 in.lbf. *(12,4–14,1 Nm)*.
17 Install the back-up washer (**15**) in the wrist pin anchor (**13**).
18 Place a new cup seal (**16**) inside the wrist pin anchor (**13**).
19 Clean the threads of the wrist pin anchor (**13**).
20 Install the o-ring (**14**) on the wrist pin anchor (**13**). See **fig 16**.
21 Insert the upper bushing and plunger end (**10**) into the wrist pin anchor (**13**) and tighten.
22 Place the wrist pin anchor (**13**) in a vise.
23 Tighten the wrist pin anchor (**13**) to a torque of 20–25 ft.lbf. *(27–34 Nm)*.

Fig. 15

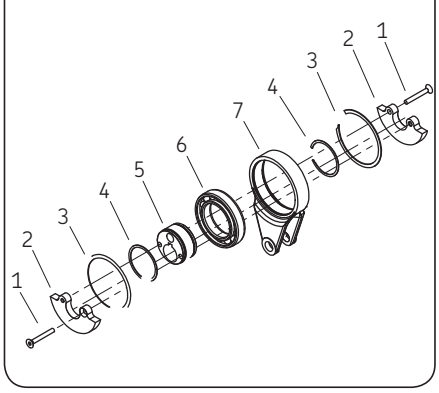

Fig. 16

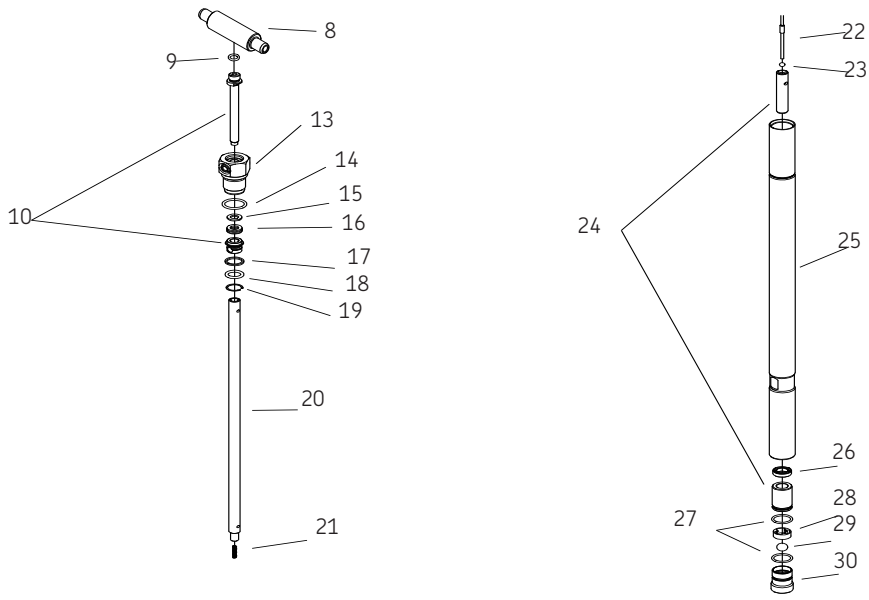

24 With the wrist pin anchor (**13**) still in the vise, align the crankrod/eccentric assembly (**7**) holes with the wrist pin anchor (**13**) holes (→ **fig. 18**).
25 Install the wrist pin bushings (**12**) through the crank rod (**7**) and into the wrist pin anchor (**13**) (→ **fig. 15**).
26 Apply Loctite 242 to the threads of the wrist pin bushing screws (**11**).
27 Insert and thread the wrist pin bushing screws (**11**) into the crankrod (**7**).
28 Torque bushing screws (**7**) to a torque of 110–125 in.lbf. *(12,4–14,1 Nm).*
29 Install the cup seal (**26**) with the slotted side toward the center of the reciprocating tube (**25**) (→ **fig. 19**).
30 Place a new o-ring (**27**) on the lower bushing and plunger (**24**).

Fig. 18

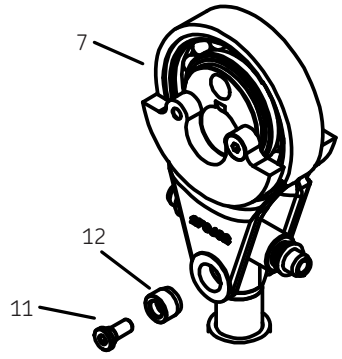

31 Slide the lower bushing and plunger (**24**) into the reciprocating tube (**25**) with the o-ring (**27**) near the bottom of the reciprocating tube (**25**) (→ **fig. 19**).
32 Install the steel check cage (**28**) into the reciprocating tube (**25**).
33 Install the ball (**29**) into the steel check cage (**28**).

Notice
For ease of installation of the lower cup, use a small piece of tubing to slide the lower up into the reciprocating tube and over the pump plunger.

34 Apply Loctite 242 or equivalent to the threads of the check seat housing (**30**).
35 Thread the check seat housing (**30**) into the reciprocating tube (**25**) and tighten using a 3/8 in. hex key.
36 Torque to 20–25 ft.lbf. *(27–33 Nm).*
37 Remove the crank rod (**7**) from the vise.
38 Refer to **fig. 20** and insert the o-ring (**59**) into the housing tube (**60**).
39 Place the back up washer (**58**) into the housing tube (**60**).
40 Insert the o-ring (**57**) into the housing tube (**60**).

Fig. 19

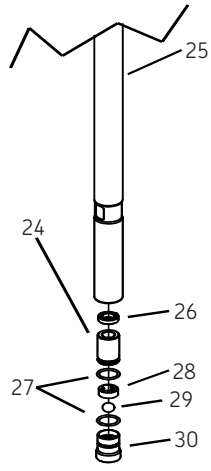

Fig. 20

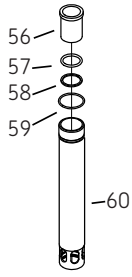

41 Insert the bronze bearing (**56**) into the housing tube (**60**).
42 Position the crankrod assembly (**7**) over the top of the pump housing (**37**) and lower into the pump housing (**37**).
43 Align the crank rod (**7**) with the shaft (**40**) mounting hole. Refer to fig. **fig. 21.**

Notice
Failure to align the key on the shaft and the key way in the eccentric will result in damage to equipment.

44 While aligning the key (**39**) on the shaft (**40**) with the eccentric key way (**5**), slide the shaft (**40**) into the eccentric (**5**) (→ **fig. 22**).
45 Install the retaining ring (**48**) on the shaft. (**40**).
46 Install the shaft cover (**46**) on the pump (**37**) (→ **fig. 21**).

Fig. 21

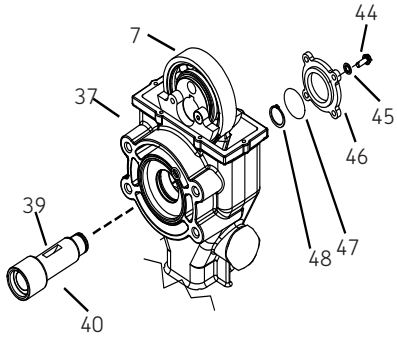

Fig. 22

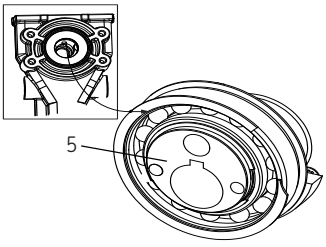

47 Insert and thread screws (**44**) with lock washers (**45**) into shaft cover (**46**) and pump housing (**37**).
48 Install the shaft adapter (**75**) inside the pump housing (**37**).
49 Install gear box o-ring (**38**) in the pump housing (**37**) groove (→ **fig. 23**).
50 Position the final stage gear set (**70**) in the gear box (**76**).
51 Place the spacer (**69**) on top of the final stage gear set (**70**).
52 Insert the final stage gear set (**68**) into the gear box (**76**).

64 Install the shovel plug (**62**) into the housing tube (**60**).
65 Install the spiral retaining ring (**63**).
66 Install new cover gasket (**36**) on pump housing (**37**) (→ **fig. 24**).
67 Install the pump cover (**35**).
68 Install the screws (**33**) with o-rings (**34**) into the pump cover (**35**).
69 Torque the screws (**33**) to a torque of 10–15 in.lbf. *(1,1–1,6 Nm)*.
70 Install the o-ring (**54**) in the outlet pin mounting hole groove of the pump housing (**37**) (→ **fig. 26**).

75 Fill the crankcase with oil up to indicator dot on dipstick.

Notice
Refer to **page 8** crankcase oil service for oil recommendations.

Fig. 23

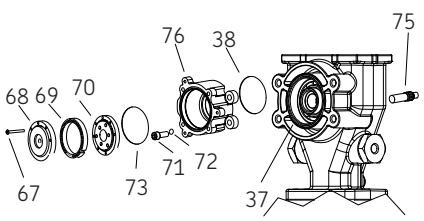

Fig. 24

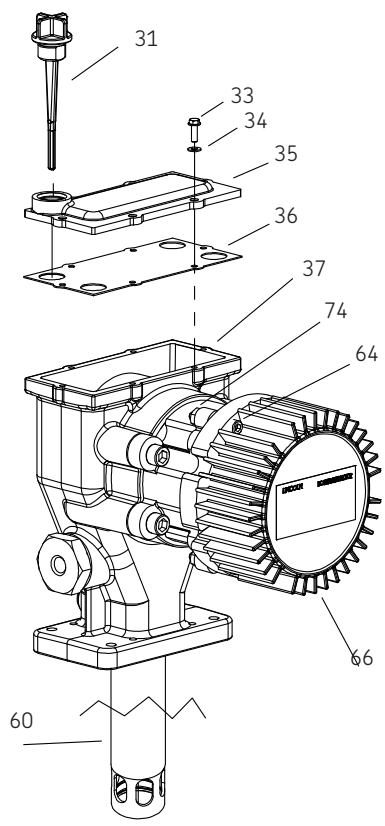

Fig. 25

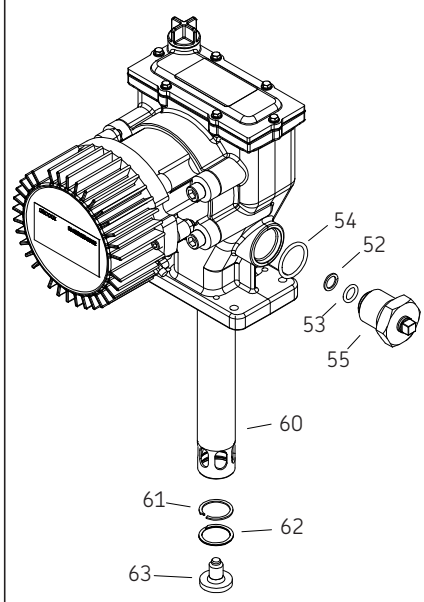

53 Install the screws (**67**) through the gear sets (**68**), (**70**) and spacer (**69**) into the gear box (**76**).
54 Torque the screws (**67**) to 15–20 ft.lbf. *(20,3–27,1 Nm)*.
55 Place the gear box (**76**) on the pump housing (**37**).
56 Install the four gear box mounting screws (**71**) and washers (**72**) in the gear box (**76**) and into the pump housing (**37**).
57 Torque the gear box mounting screws to a torque of 20–25 ft.lbf. *(27,1–33,9 Nm)*.
58 Install the electric motor o-ring (**73**) in the groove of the gear box (**76**).
59 Place the electric motor (**66**) on the pump housing (**37**).
60 Insert the electric motor mounting screws (**64**) with lock washers (**65**) into the electric motor (**66**) and gear box (**76**).
61 Thread the electric motor jam nuts (**74**) onto the mounting screws (**64**).
62 While holding the mounting screws (**64**) with a hex head wrench, torque the jam nuts (**74**) to a torque of 100–110 in.lbf. *(1,3–12,4 Nm)*. Refer to **fig. 25**.
63 Refer to **fig. 25** and insert the retaining ring (**61**) into the second groove of the housing tube (**60**).

71 Install the back up washer(**52**) inside the outlet pin nut (**55**).
72 Install the o-ring (**53**) inside the outlet pin nut (**55**).
73 Line up the outlet pin and thread the outlet pin nuts (**55**) into the pump housing (**37**).
74 Torque to 30–35 ft.lbf. *(40,7–47,5 Nm)*.

76 Install the crank case oil dip stick and torque to 10–15 in.lbf. *(1,1–1,7 Nm)* (→ **fig. 24**).

End of procedure

Troubleshooting

Condition	Possible cause	Corrective action
Pump does not run.	Pump is seized or damaged.	Disassemble pump and repair any parts that are damaged or worn.
	Incorrectly wired.	Connect red motor lead to positive battery terminal and black motor lead to negative terminal.
Pump speeds up or runs erratically.	Low level of grease or reservoir is empty.	Fill reservoir.
	Follower plate is stuck and separated from grease.	Check follower plate and container for damage.
	Pump piston or checks are worn.	Disassemble pump and repair.
Pump runs, but output is low.	Motor speed set to low.	Increase motor speed setting.
	Faulty inlet check (**29**, **30**), faulty discharge check (**23**, **24**) or damaged o-ring (**27**).	Replace faulty components.
Seepage from housing cover (**35**).	Cup seal (**16**) or o-ring (**14**) worn out.	Check seals and replace if necessary.
Pump is noisy.	Crankcase needs oil.	Fill with oil.
	Worn wrist pin bushing (**12**).	Check the bushings and replace if necessary Dismantle and clear check.
Pump does not build pressure.	Foreign material holding lower check open.	Consider adding grease filter to system.
Motor runs, but no pump output.	Gear set or adapter shaft stripped or broken.	Dismantle and replace damaged part.

Parts and tools

Tool and consumable list

7/16 in. open end wrench
1 1/2 in. open end wrench
3/4 in. open end wrench

12 in. adjustable wrench
1/8 in. hex head wrench
5/32 in. hex head wrench

1/4 in. hex head wrench
5/16 in. hex head wrench
3/8 in. hex head wrench

1/4 in. drive socket
1/4 in. socket
5/16 in. socket

Flat screwdriver 0.10 in. *(2,54 mm)* wide 0.025 in. *(0,635 mm)* thick
Pick to remove seals and spiral retaining rings
Small snap ring pliers

Special tool kit 276275
Phillips screwdriver
1/2 in. hex head wrench

Hammer
Torque wrench (ft.lbf. and in.lbf.)
Hex head socket adapters (required to torque hex head screws)

Loctite 242 medium strength thread lock or equivalent

Parts list

Item no.	Description	Part no.	Quantity
1	Flat head screw (1/4-28 x 1 3/4)	270635	2
2	Counter weight	272197	2
3	Retaining ring	270609	2
4	Retaining ring	270608	2
5	Crank eccentric	270666	1
6	Ball bearing	270607	1
7	Crank rod	270665	1
8	Outlet pin	270670	1
9	O-ring (nitrile)	34255[1),2)]	1
10	Upper bushing and plunger	275000[2)]	1
11	Pivot screw	275006	2
12	Wrist pin bushing	275005	2
13	Wrist pin anchor	274992	1
14	O-ring	275015[2)]	1
15	Backup washer	274998[1),2)]	1
16	Cup seal (polyurethane)	274999[1),2)]	1
17	Steel back-up ring	274997[1),2)]	1
18	O-ring	272791[1),2)]	1
19	Retainer clip	274996[1),2)]	1
20	Plunger link rod	See Chart	1
21	Spring	277168[2)]	1
22	Check rod	277167	1
23	Ball (3/16 in.)	66010[2)]	1
24	Lower bushing and plunger	27500[1)]	1
25	Reciprocating tube	See chart	1
26	Cup Seal (polyurethane)	270625[2)]	1
27	O-ring (nitrile)	275011[2)]	2
28	Ball cage	272179	1
29	Ball (3/16 in.)	66001[2)]	1
30	Check seat	270664	1
31	Dipstick with o-ring	275369	1
32	O-ring	275015[2)]	1
33	Self-threading screw (#8 x 1/2)	270633	6
34	Gasket (screw)	252986[2)]	6
35	Housing cover	275009	1
36	Cover gasket (nitrile)	270630[2)]	1
37	Pump housing	278230	1
38	O-ring	272567[2)]	1
39	Woodruff key	272560	1
40	Pump shaft	277397	1
41	Retaining ring	272561	1
42	Ball bearing	272556	1
43	Shaft seal	272554[2)]	1
44	Screws	272557	4
45	Lock washer	66051	4
46	Bearing cover	272549	1
47	O-ring	272559[2)]	1
48	Retaining ring	272563	1
49	Ball bearing	272555	1
50	Retaining ring	272562	1
51	Drain plug	244752	1
52	Backup washer	249837[2)]	2
53	O-ring	249838[2)]	2
54	O-ring	270719[2)]	2
55	Outlet pin nut	270619	2
56	Bronze bearing	270674	1
57	O-ring (polyurethane)	249839[2)]	1
58	Backup washer	270652[2)]	1
59	O-ring (nitrile)	34431[2)]	1
60	Housing tube	See Chart	1
61	Retaining ring	277398	1
62	Shovel plug	270707	1
63	Retaining ring	270705	1
64	Screw	50051	3
65	Lock washer	272569	3
66	Motor	278661*	1
67	Screw	272552	4
68	First stage gear set	See chart	1
69	Spacer	272547	1
70	Final stage gear set	See chart	1
71	Screw	272564	4
72	Lock washer	272566	4
73	Shaft seal	272544[2)]	4
74	Nut (1/4–20)	51304	3
75	Shaft, adapter	272546	1
76	Gear box housing	272541	1
77	Safety unloader	90942	1

Non-common repair parts

		Part number Model 85747	Model 85748	Model 85749
20	Plunger link rod	277381	277381	277383
25	Reciprocating tube	277732	277732	277734
60	Housing tube	277736	277736	277738
68	First stage gear set	272543	272585	272585
70	Final stage gear set	272542	272584	272584

[1)] Included in 275186 repair kit.
[2)] Included in 277723 repair kit.
* Indicates change

Fig. IPB 1

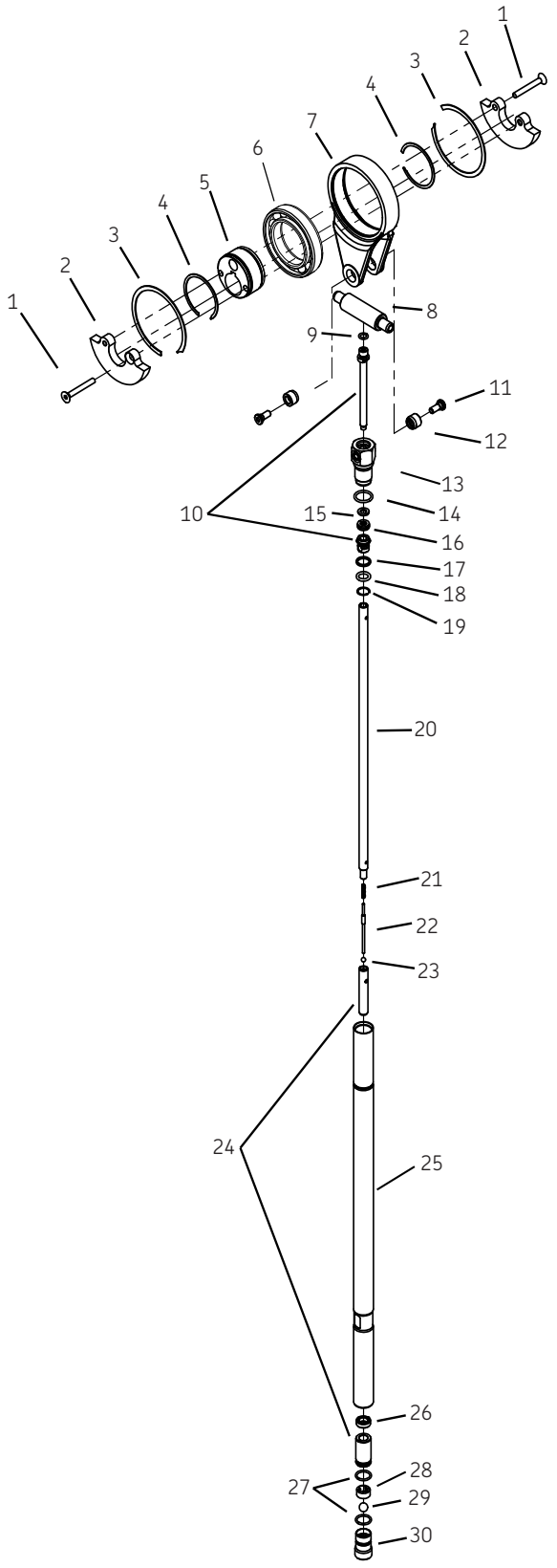
1
2
3
4
5
6
7
8
9
10
11
12
13
14
15
16
17
18
19
20
21
22
23
24
25
26
27
28
29
30

Fig. IPB 2

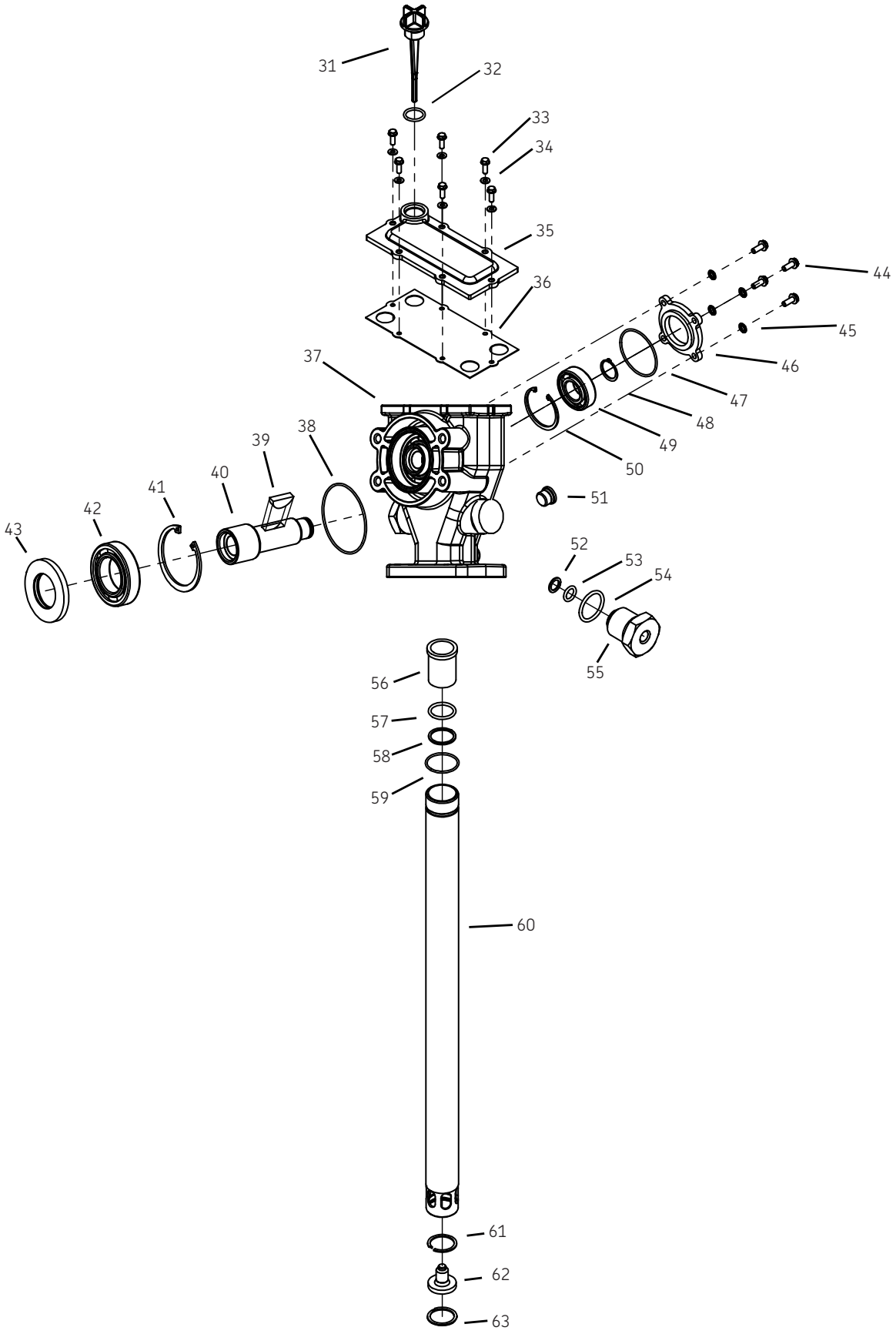
31
32
33
34
35
36
37
38
39
40
41
42
43
44
45
46
47
48
49
50
51
52
53
54
55
56
57
58
59
60
61
62
63

Fig. IPB 3

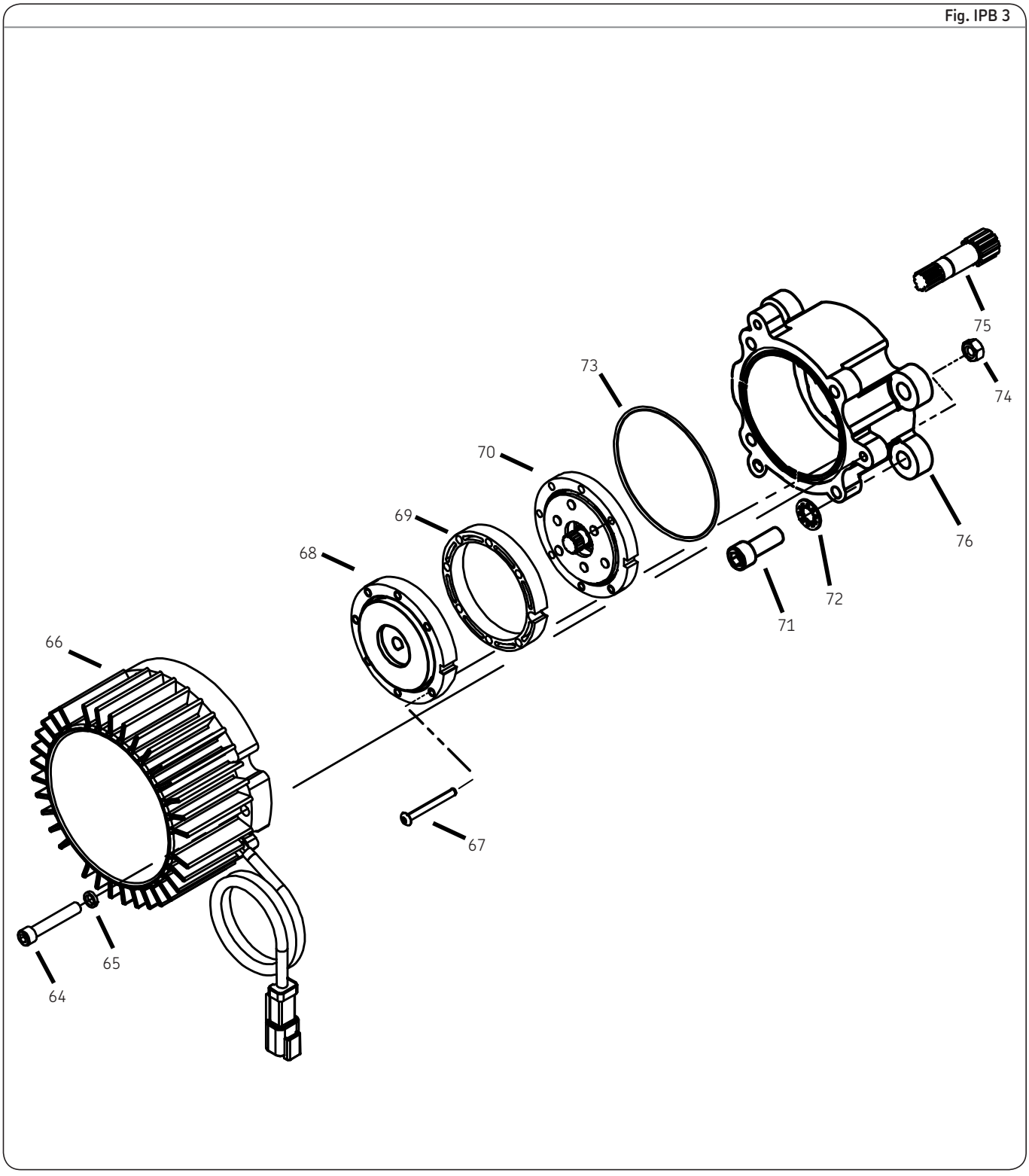

This page intentionally left blank.

This page intentionally left blank.

Lincoln industrial standard warranty

Standard limited warranty

Lincoln warrants the equipment manufactured and supplied by Lincoln to be free from defects in material and workmanship for a period of one (1) year following the date of purchase, excluding there from any special, extended, or limited warranty published by Lincoln. If equipment is determined to be defective during this warranty period, it will be repaired or replaced, within Lincoln's sole discretion, without charge. This warranty is conditioned upon the determination of a Lincoln authorized representative that the equipment is defective. To obtain repair or replacement, you must ship the equipment, transportation charges prepaid, with proof of purchase to a Lincoln Authorized Warranty and Service Center within the warranty period.

This warranty is extended to the original retail purchaser only. This warranty does not apply to equipment damaged from accident, overload, abuse, misuse, negligence, faulty installation or abrasive or corrosive material, equipment that has been altered, or equipment repaired by anyone not authorized by Lincoln. This warranty applies only to equipment installed, operated and maintained in strict accordance with the written specifications and recommendations provided by Lincoln or its authorized field personnel.

This warranty is exclusive and is in lieu of any other warranties, express or implied, including, but not limited to, the warranty of merchantability or warranty of fitness for a particular purpose. Warranty on items sold by Lincoln, but not manufactured by Lincoln are subject to the warranty consideration, if any, of their manufacturer (such as hoses, hydraulic and electric motors, electrical controllers, etc.) Assistance in making such warranty claims can be offered as required.

In no event shall Lincoln be liable for incidental or consequential damages. Lincoln's liability for any claim for loss or damages arising out of the sale, resale or use of any Lincoln equipment shall in no event exceed the purchase price. Some jurisdictions do not allow the exclusion or limitation of incidental or consequential damages, therefore the above limitation or exclusion may not apply to you.

This warranty gives you specific legal rights. You may also have other rights that vary by jurisdiction.

Customers not located in the Western Hemisphere or East Asia: Please contact Lincoln GmbH and Co. Kg, Walldorf, Germany, for your warranty rights.

Special limited warranties

Special limited 2 year warranty sl-v series, single injectors-85772, 85782, replacement injectors-85771, 85781 and the DC electric FlowMaster II

Lincoln warrants the DC electric FlowMaster II and SL-V Injector series to be free from defects in material and workmanship for two (2) years following the date of purchase. If an injector model (single or replacement) is determined to be defective by Lincoln, in its sole discretion, during this warranty period, it will be repaired or replaced, at Lincoln's discretion, without charge.

Special limited 5 year warranty series 20, 25, 40 bare pumps, DC electric FlowMaster II, pmv bare pumps, heavy duty and 94000 series bare reels

Lincoln warrants series 20, 25, 40 bare pumps, pmv bare pumps, heavy duty (82206), mini bench (81133, 81323), and all 94000 LFR series (single arm and dual arm) bare reels to be free from defects in material and workmanship for five (5) years following the date of purchase. If equipment is determined by Lincoln, in its sole discretion, to be defective during the first year of the warranty period, it will be repaired or replaced at Lincoln's discretion, without charge. In years two (2) and three (3), the warranty on this equipment is limited to repair with Lincoln paying parts and labor only. In years four (4) and five (5), the warranty on this equipment is limited to repair with Lincoln paying for parts only.

Lincoln Industrial contact information

To find Lincoln Industrial's nearest service center in the United States, call customer service at 314-679-4200. For international callers dial 01-314-679-4200. You may also use our website lincolnindustrial.com.

Declaration of conformity according to machinery Directive 98/37/EC

This is to declare that the design of the FlowMaster II rotary driven 24 V DC electric pump in the version supplied by Lincoln Industrial, One Lincoln Way, St. Louis, MO. 63120, U.S.A., complies with provisions of Directive 98/37/EC.

Applied harmonized standards:

- EN 292-1 Safety of machinery part 1 Basic terminology, methodology
- EN 292-2 Safety of machinery part 2 Technical principles and specification
- EN 809 Pumps and pump units forliquids safety requirements
- EN-60204-1 Safety of electrical equipment
- EN 60034-1 Safety of rotating electrical machines

Declaration of conformity according to EMC Directive 93/68 EEC

This is to declare that the design of the FlowMaster II rotary driven 24 V DC electric pump in the version supplied by Lincoln Industrial, One Lincoln Way, St. Louis, MO. 63120, U.S.A., complies with the provision of the Directive 93/68 EEC.

Applied harmonized standards:

- EN 50081-1 Electromagnetic compatibility generic emission standard part 1: residential, commercial and light industry,
- EN 50082-2 Electromagnetic compatibility generic immunity standard part 2: industrial environments

CE

Paul G. Conley

Paul G. Conley, Chief Engineer
December 16th, 2003

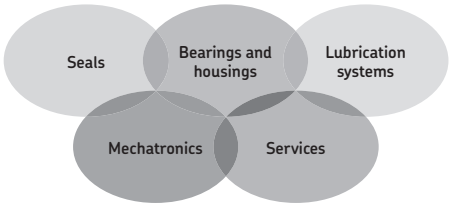

The Power of Knowledge Engineering
Combining products, people, and application-specific knowledge, SKF delivers innovative solutions to equipment manufacturers and production facilities in every major industry worldwide. Having expertise in multiple competence areas supports SKF Life Cycle Management, a proven approach to improving equipment reliability, optimizing operational and energy efficiency and reducing total cost of ownership.

These competence areas include bearings and units, seals, lubrication systems, mechatronics, and a wide range of services, from 3-D computer modelling to cloud-based condition monitoring and asset management services.

SKF's global footprint provides SKF customers with uniform quality standards and worldwide product availability. Our local presence provides direct access to the experience, knowledge and ingenuity of SKF people.

SKF **PUB LS/I4 13384/R1 EN** · July 2014 · **Form 404439B**

lincolnindustrial.com

skf.com/lubrication