MODEL NO. 84960, 84961, 84962 HYDRAULICALLY OPERATED GREASE PUMP-SERIES "B"

LINCOLN INDUSTRIAL

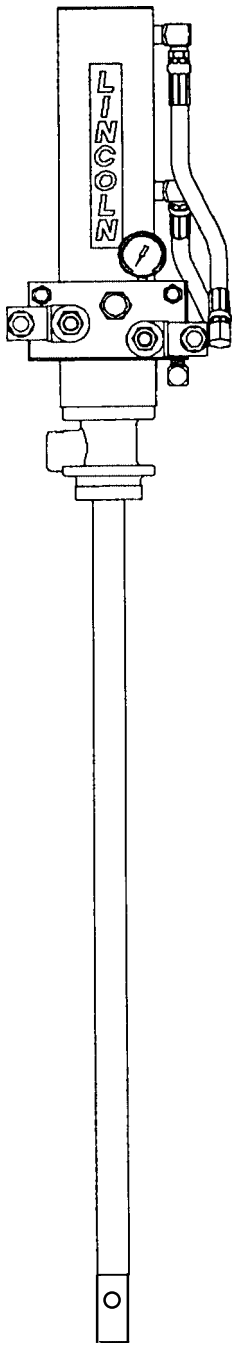

SPECIFICATIONS

POWER REQUIREMENTS:	SV1 & SV2= .6 Amps @ 24 VDC each
RATIO(See Note in Fig. 2)	16:1
INPUT PRESSURE	300-3500 P.S.I.
INPUT FLOW @ 30 CYCLES PER MINUTE	1.0 G.P.M.
MAXIMUM HYDRAULIC TEMP.	210° F
OUTPUT PRESSURE	7500 P.S.I. MAX.
OUTPUT FLOW @ 30 CYCLES PER MINUTE	11 CU. IN./MIN.
AMBIENT TEMP.	-40° TO +135° F
SEALS	POLYURETHANE AND NITRILE
FILTRATION REQUIRED	10 MICRON

DESCRIPTION

Models 84960, 84961 and 84962 are hydraulically operated grease pumps designed for centralized lubrication systems on off-road equipment which utilizes 24VDC power sources.

OWNER/OPERATOR RESPONSIBILITY

It is the owner/operator responsibility to properly use and maintain this equipment.

The instructions and warnings contained in this manual shall be read and understood by the owner/operator prior to operating this equipment.

If an owner/operator does not understand English, the contents of this manual shall be explained in the owner/operator native language to assure the owner/operator comprehends.

It is the owner/operator responsibility to maintain the legibility of all warning and instruction labels.

The owner/operator shall retain this manual for future reference to Important warnings, operating and maintenance instructions.

⚠ WARNING

Failure to heed the following warnings including misuse, over pressurizing, modifying parts, using incompatible chemicals and fluids, or using worn or damaged parts, may result in equipment damage and/or serious personal injury.

- Do not exceed the stated maximum working pressure of the pump or of the lowest rated component in your system.
- Do not alter or modify any part of this equipment.
- Do not attempt to repair or disassemble the equipment while the system is pressurized.
- Make sure all fluid connections are securely tightened before using this equipment.
- Always read and follow the fluid manufacturer's recommendations regarding fluid compatibility, and the use of protective clothing and equipment.
- Check all equipment regularly and repair or replace worn or damaged parts immediately.

Copyright 2001
Printed in U.S.A.

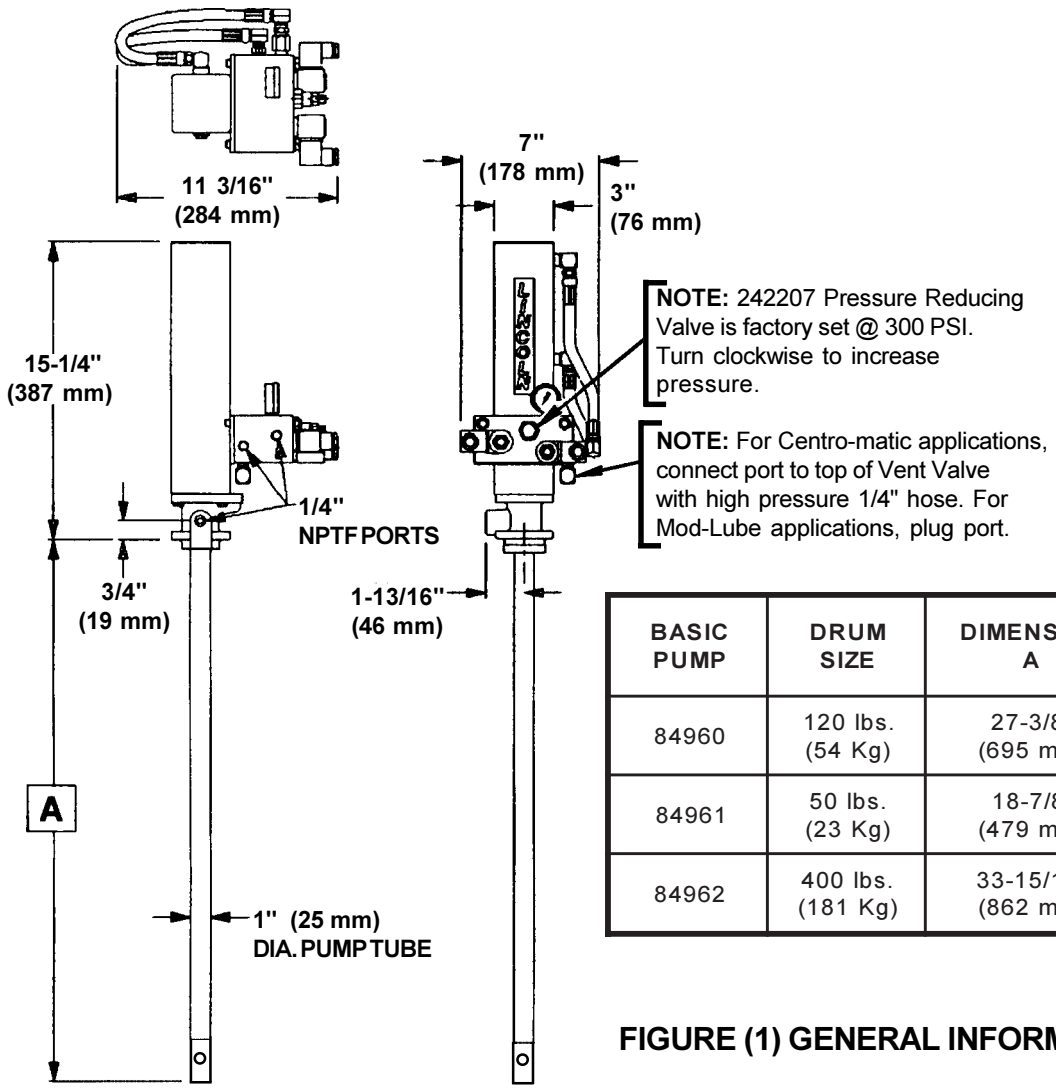

BASIC PUMP	DRUM SIZE	DIMENSION A
84960	120 lbs. (54 Kg)	27-3/8" (695 mm)
84961	50 lbs. (23 Kg)	18-7/8" (479 mm)
84962	400 lbs. (181 Kg)	33-15/16" (862 mm)

FIGURE (1) GENERAL INFORMATION

SAFETY INSTRUCTIONS

This equipment generates very high grease pressure. Extreme caution should be used when operating this equipment as material leaks from loose or ruptured components can inject fluid through the skin and into the body causing serious bodily injury including possible need for amputation. Adequate protection is recommended to prevent splashing of material onto the skin or into the eyes.

IMPORTANT
If any fluid appears to penetrate the skin, get emergency medical care immediately. Do not treat as a simple cut. Tell attending physician exactly what fluid was injected.

WARNING

DO NOT alter or modify any part of the equipment as this may cause a malfunction and result in serious bodily injury.

INSPECTION

If overpressurizing of the equipment is believed to have occurred, contact the factory authorized warranty and service center nearest you for inspection of the pump.

Specialized equipment and knowledge is required for repair of this pump.

Contact the factory authorized warranty and service center nearest you for repair or adjustments other than maintenance specified in this manual.

Annual inspection by the factory authorized warranty and service center nearest you is recommended.

A list of factory authorized warranty and service centers is available upon request.

DAMAGED PUMPS

Any pump that appears to be damaged in any way, is badly worn or operates abnormally shall be removed from use until repairs are made. Contact the factory authorized warranty and service center nearest you for repairs.

INSTALLATION

See Figures (1) and (2). A typical installation is shown only as a guide for

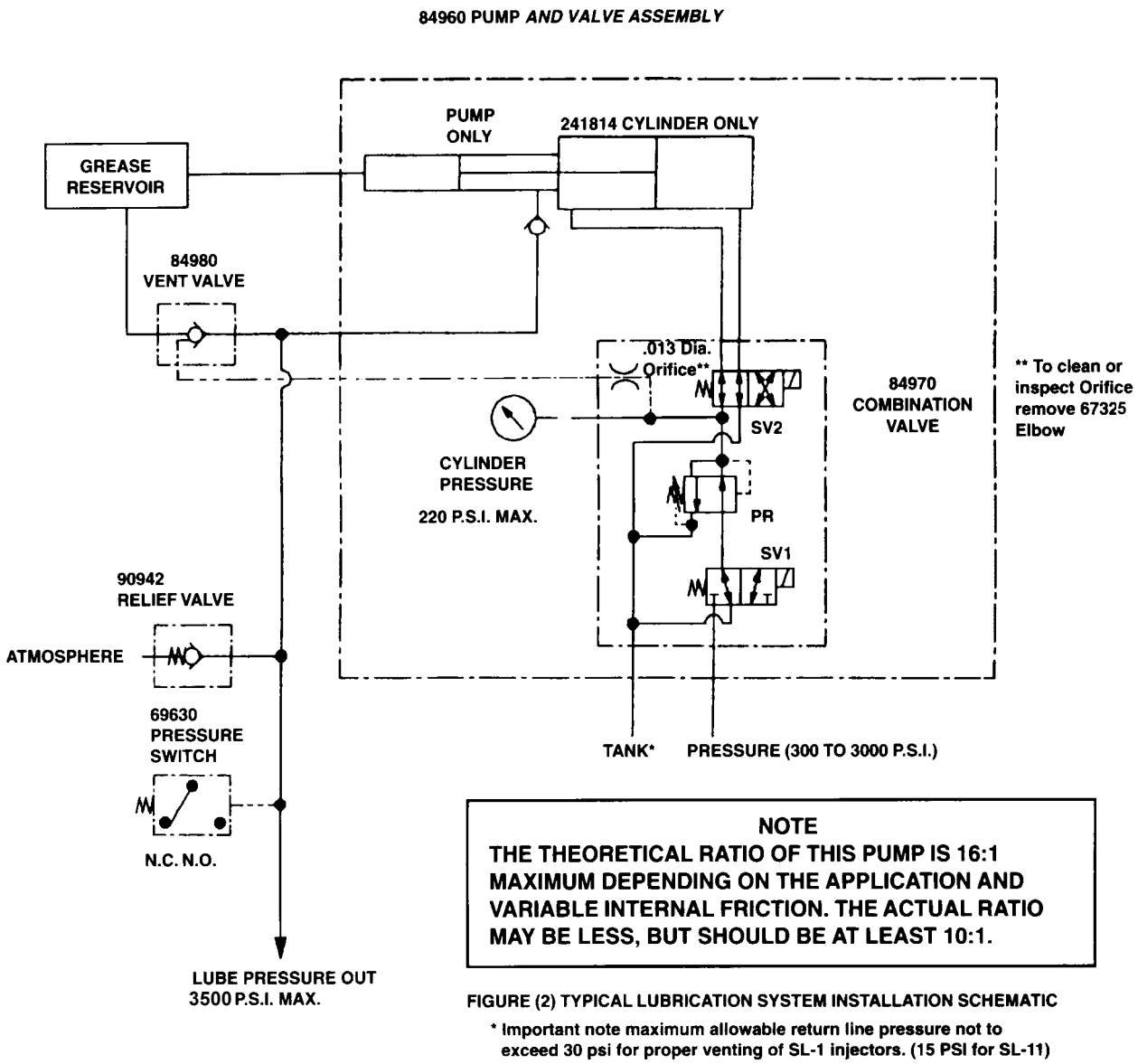

FIGURE (2) TYPICAL LUBRICATION SYSTEM INSTALLATION SCHEMATIC

* Important note maximum allowable return line pressure not to exceed 30 psi for proper venting of SL-1 injectors. (15 PSI for SL-11)

selecting and installing system components. Contact your Lincoln representative for assistance in designing a system to suit your specific need.

WARNING

Maximum allowable output pressure of this pump is 7500 p.s.i. Be sure that all system equipment and accessories are rated to withstand the maximum working pressure of this pump. Do Not exceed the maximum working pressure of the lowest rated component in the system.

Flush the supply lines and hoses with compatible solvent and blow dry with air before connecting them to the system. This is to purge any contamination such as dirt, moisture, or metal shavings that could damage the pump or system components. The pump was tested in lightweight oil which was left in it to protect the pump from corrosion. Flushing of the pump before connecting it to the system might be desired to prevent contamination of the grease you are pumping.

SYSTEM OPERATION

This section describes the operation of the hydraulic pump, the controller and how they function with other Lincoln components in the system. See Figure (2), System Installation Schematic and Figure (3), Controller Schematic for this description. The system operates as follows:

A. With the pump and controller systems in a rest state, a preset time interval occurs as determined by the bearings lubrication requirements.
B. When the controller times out, a 24 VDC signal will energize SV1, forcing it to open.
C. As SV1 opens, the resulting hydraulic fluid pressure closes the vent valve and flows through the pressure reducing valve.
D. The pressure reducing valve lowers hydraulic fluid pressure to the operating range of the hydraulic pump.

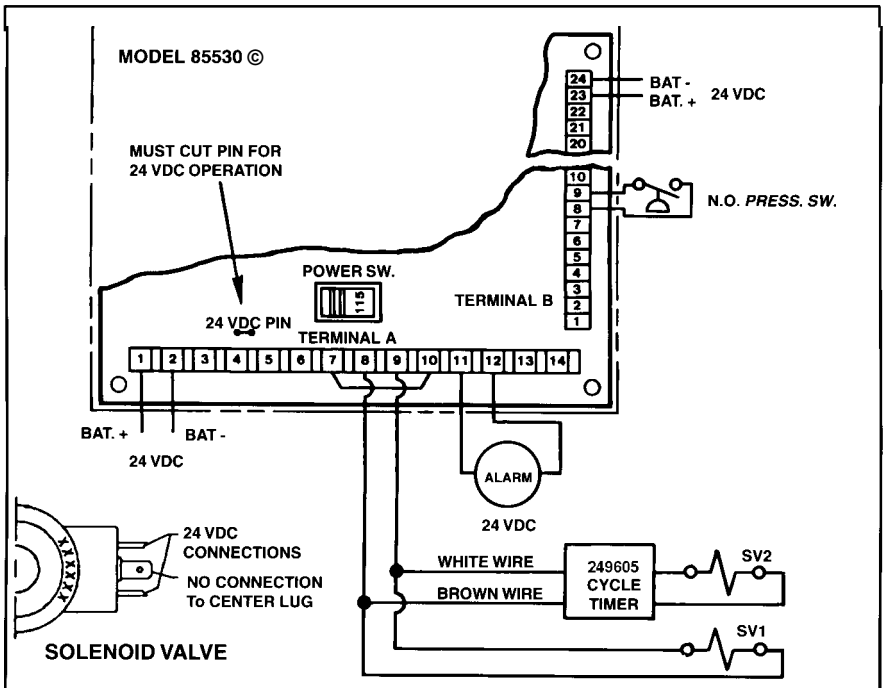

FIGURE (3) CONTROLLER SCHEMATIC

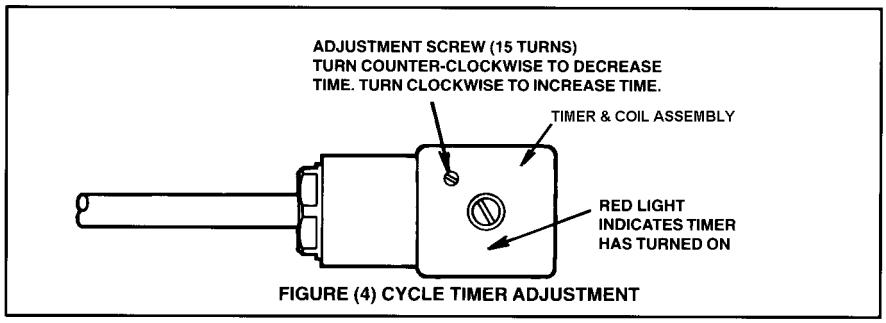

FIGURE (4) CYCLE TIMER ADJUSTMENT

WARNING

Controller with pressure switch and safety valve must be used in the lube system if cylinder pressure exceeds 220 p.s.i.! Failure to use these monitoring and safety devices may result in damage to system components and personal inury!

E. After the system pressure has been reduced, it passes on to SV2 which controls the direction of the hydraulic cylinder which operates the grease pump.

F. The 24 VDC signal is also sent to the cycle timer located at SV2. The cycle timer will send a pulsing signal, 1 second on and 1 second off, to SV2. SV2 directs the hydraulic fluid to the pump at 30 cycles/minute.

G. With the vent valve closed, the pump continues to cycle until maximum pressure is achieved and the injectors have metered grease to the bearings. In most grease systems this is 2500 p.s.i.

H. When the maximum system pressure is reached, the pressure switch closes.

I. The closed pressure switch signals the controller to stop the pumping cycle.

J. At this time the controller terminates the signals to SV1 and SV2.

K. As SV2 is deenergized, the pump stops cycling.

L. As SV1 is deenergized, the hydraulic fluid stops flowing to the pressure reducing valve and the vent valve.

M. As the vent valve is deenergized it opens and allows the grease pressure to drop to zero so the injectors can recharge for their next output cycle.

N. The system is now at rest, ready for another lube cycle and the sequence repeats itself.

WIRING INSTRUCTIONS

Refer to following instructions when wiring Model 85530, Cycle Timer - P/N 249605 and Solenoid Valves - SV1 and SV2. See Figure 3.

Model 85530:
Cut 24 VDC pin on power supply board.

Connect battery positive voltage at terminal 1 on Terminal Strip A (terminal 7 on terminal strip A is internally connected to terminal 1) and at terminal 23 on Terminal Strip B.

Connect battery negative voltage at terminal 2 on Terminal Strip A (terminal 9 and 12 are internally connected to terminal 2) and at terminal 24 on Terminal Strip B.

Cycle Timer, SV1 and SV2:
Replace SV2 coil with Timer & Coil Assembly 249605.

Connect a wire from Model 85530 Terminal Strip A terminal number 8 to the **brown wire** from the cycle timer and one of the wires coming from SV1.

Note: Green wire from cycle timer not used.

Connect a wire from Model 85530 Terminal Strip A terminal number 9 to the **white wire** from the cycle timer and the other wire coming from SV1.

CYCLE TIMER ADJUSTMENT

Cycle Timer is factory set at 1 second on and 1 second off for 30 cycles/ minute. If adjustment is necessary refer to Figure 4 and the following procedure.

The one adjustment screw adjusts both the ON time and OFF time equally. The adjustment range is from .5 seconds (60 cycles/minute) to 5 seconds (6 cycles/minute).

The adjustment screw allows 15 turns of adjustment over the timing range. The adjustment screw should be turned 20 turns counter-clockwise to insure you are starting at minimum. Note: You can not adjust below minimum - additional turns counter-clockwise have no effect.

Each clockwise turn will equal approximately .3 seconds. Add the number of turns clockwise to reach the approximate desired timing. Some additional adjustment may be necessary depend-ing on the accuracy needed.

Use the light on the cycle timer to help in setting the time. The light will turn on when there is power going to SV2.

TROUBLESHOOTING

If the following procedures do not correct the problem, contact a factory authorized service center. When submitting equipment to be repaired, be sure to state the nature of the problem and indicate if a repair cost estimate is required.

PROBLEMS

CYLINDER PRESSURE GAUGE DOES NOT REGISTER PRESSURE.

A. No system pressure to the pump.
B. No 24 VDC signal at solenoids SV1 and SV2.
C. Pressure reducing valve set too low. Increase setting by 1/2 turn to check operation.
D. Primary solenoid valve SV1 may be inoperative.

PUMP PRESSURE BUILDS VERY SLOWLY OR NOT AT ALL.

A. No pulsing signal at SV2.
B. Pressure reducing valve may be set too low.
C. Grease viscosity may be too high for temperature at which pump is operating.
D. If pressure is not building at all, SV2 may be inoperative.
E. Pump piston ball checks and inlet checks may have foreign matter trapped causing leakage. Remove, inspect and clean if necessary.
F. Inspect sealing surfaces between upper and lower inlet checks. Replace if rough or pitted.
G. Replace shovel rod if rough or pitted. Replace shovel rod packing.
H. Inspect lubricant supply line for leaks or breaks.
I. If hydraulic vent valve is used, check for clogged orifice (Refer to page 3 & page 6).

DISASSEMBLY

Refer to SERVICE PARTS for part numbers and location. Bleed all pressure from hydraulic and grease lines before disassembling pumps.

A. Disconnect hose assemblies (241806 and 271598) from upper portion of the pump.
B. Remove cylinder adapters and gaskets (241961 and 241810).
C. Remove bolts and washers securing cover to pump (50058 and 48083).
D. Remove cover and valve assembly (241799 and 84970).
E. Using two wrenches, unscrew coupling nut (241805) from pump shaft end (11329).
F. Remove four upper bolts (50771) and lock washers (68186), securing mounting plate (241803) to the tie rods (241804).
G. Remove hydraulic cylinder (241814) and mounting plate (241803).
H. The hydraulic cylinder can be disassembled from mounting plate by removing four bolts (242048) and lock washers (68186).
I. Tie rods (241804) can now be removed from pump outlet body (40537) by removing four lower bolts and lock washers (50771 and 68186).
J. Unscrew pump tube from outlet body (40537).
K. Extend pump piston rod (11340) out of the bottom of outlet body (40537). Place wrenches on piston end (11329) and flats of piston rod (11340) and unscrew piston rod. Thread the piston rod through the gland packing to allow removal of the pump tube.
L. Unscrew gland packing nut (12333) from outlet body and remove all gland parts.
M. Remove the priming tube (239719) from the bushing extension (61273).
N. Extend plunger rod (11723) out of bushing extension and unscrew priming plunger (11724) to allow removal of priming check parts and plunger rod (11723).
O. Remove bushing extension (61273) and unscrew plunger and bushing assembly (90554) from pump tube. Unscrew coupling nut (11345) from plunger adapter (11344) to allow removal of plunger and bushing assembly intact, reducing the chance of loosing ball stop (57027) and check ball (66010).

ASSEMBLY

To reassemble, perform DISASSEMBLY procedures in reverse.

IMPORTANT

To prevent damage to pump gland packing and to help increase packing life, lube pump piston rod before assembly. Thread piston rod through gland packing when assembling pump.

REPAIR

Repair is limited to replacememt of listed service parts. Special procedures and tools are required. Contact Lincoln Technical Service, One Lincoln Way, St. Louis, MO 63120-1578, (314) 679-4200 Ext. 782 for your nearest authorized service center.

When ordering replacement parts, list: part number, description, model number and series letter.

ACCESSORIES

Model 84980	Hydraulic Operated Vent Valve
Model 84990	Hydraulic Operated Vent Valve Assembly
Model 84616	Drum Cover and Tiedown Assembly
245530	Viton/Teflon Packing Kit (For Pumping Synthetic Lubricants)
Model 85530	Controller
Model 249605	Cycle Timer/ Coil Assembly
Model 84015	24 VDC Timer
Model 69630	Pressure Switch
83001	Lower Pump Tube Repair Kit

SERVICE PARTS

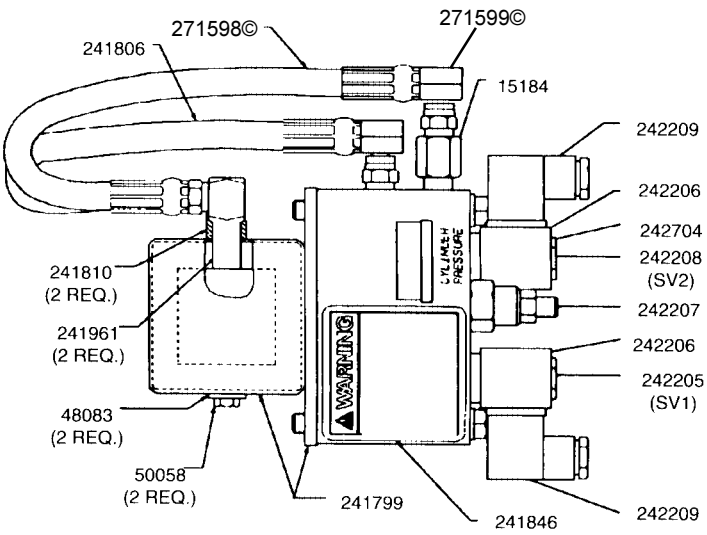

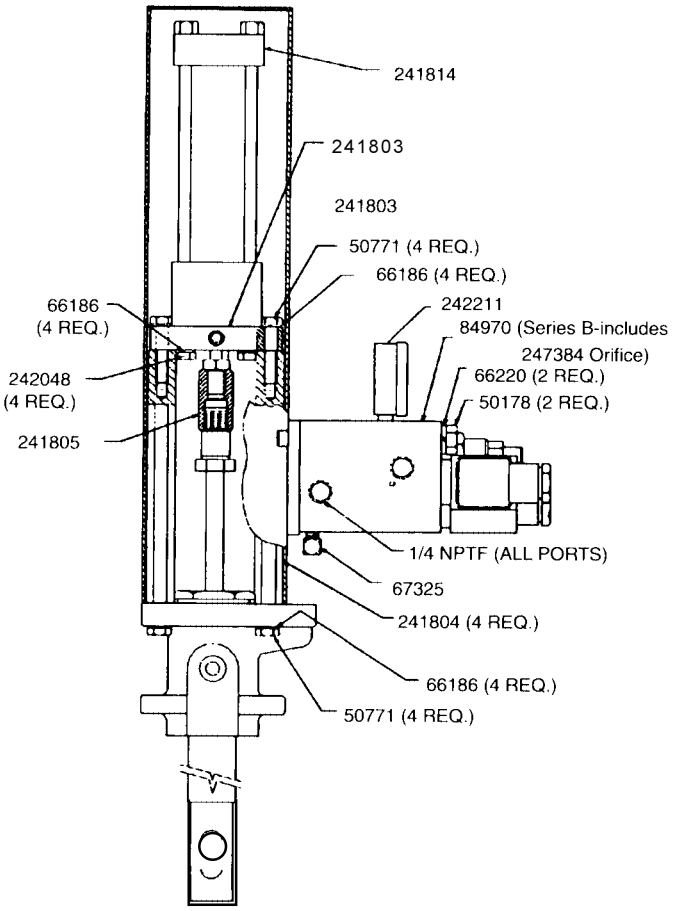

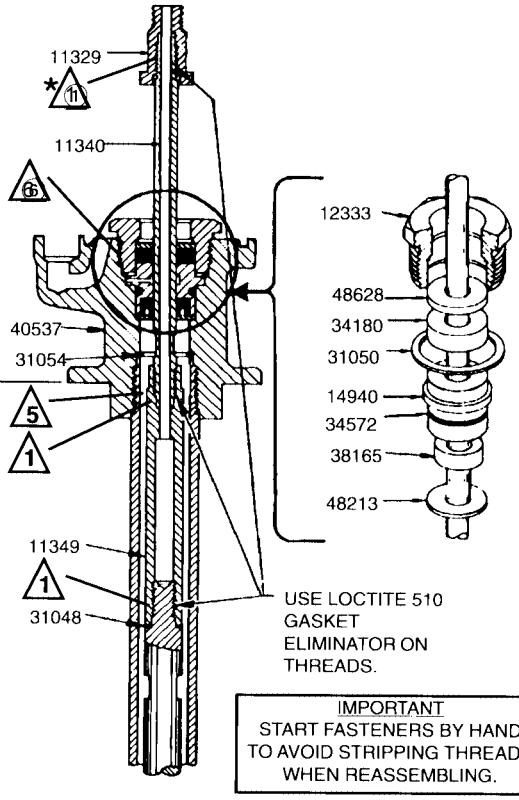

IMPORTANT
START FASTENERS BY HAND TO AVOID STRIPPING THREADS WHEN REASSEMBLING.

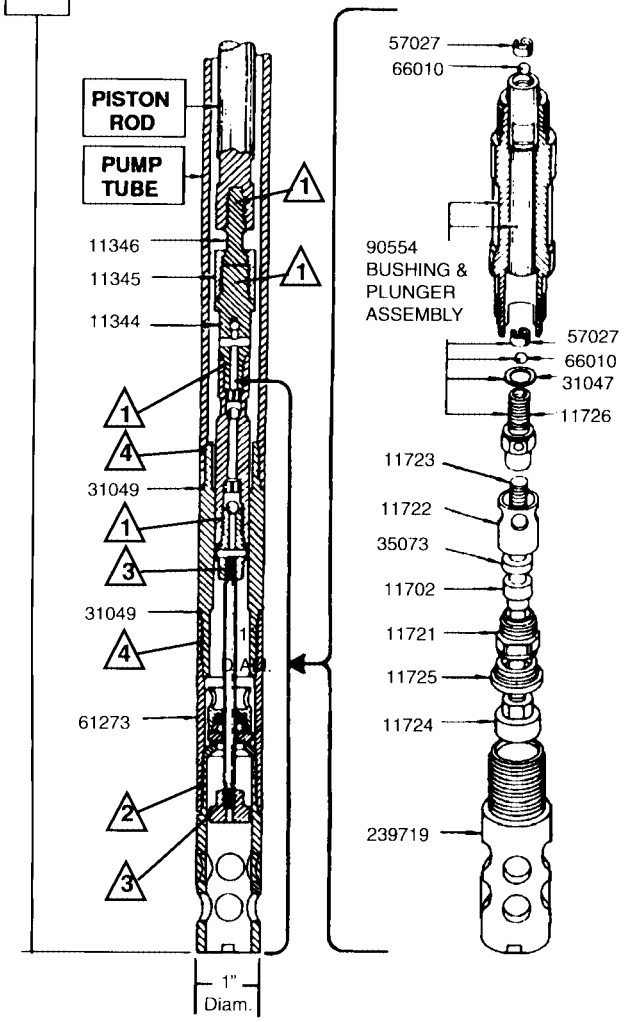

BASIC PUMP	PISTON ROD	PUMP TUBE	DRUM SIZE	DIMENSION A
84960	13020	61407	120 lbs. (54 Kg)	27-3/8" (695 mm)
84961	11799	61293	50 lbs. (23 Kg)	18-7/8" (479 mm)
84962	11761	61285	400 lbs. (181 Kg)	33-15/16" (862 mm)

© INDICATES CHANGE

See Torque Specifications on Page 7 for all keyed notes.

SERVICE PARTS

PART	QTY.	DESCRIPTION	PART	QTY.	DESCRIPTION
11329	1	Piston Bolt	50771	8	Bolt
11340	1	Pistion Rod	57027	2	Ball stop
11344	1	Plunger adapter	61273	1	Bushing extension
11345	1	Coupling nut	66010	4	Ball
11346	1	Coupling stud	66186	12	Lockw asher
11349	1	Pistion rod connector	66220	2	Lockw asher
11702	1	Check w asher	67325	1	Elbow
11721	1	Priming check	84970	1	Valve assembly
11722	1	Check stop	90554	1	Plunger and bushing assembly
11723	1	Plunger rod	239719	1	Priming tube
11724	1	Priming plunger	241799	1	Cover assembly
11725	1	Priming check seat	241803	1	Mounting plate
11726	1	Check seat	241804	4	Tie rod
12333	1	Gland packing nut	241805	1	Coupling nut
14940	1	Gland packing spacer	241806	1	Hose
15184	1	Adapter	241810	2	Gasket
31047	1	Check seat gasket	241814	1	Hydraulic cylinder
31048	1	Connector gasket	241846	1	Label
31049	2	Bushing gasket	241961	2	Adapter
31050	1	Gland gasket	242048	4	Bolt
31054	1	Pump tube gasket	242205	1	3-w ay valve
34180	1	Gland packing (nitrile)	242206	2	Solenoid coil
34572	1	O-ring (polyurethane)	242207	1	Pressure reducing valve
35073	1	Priming check packing (nitrile)	242208	1	4-w ay valve
38165	1	U-cup packing (polyurethane)	242209	2	Solenoid connector
40537	1	Outlet body	242211	1	Gauge
48083	2	Washer	242704	2	Nut
48213	1	Gland packing w asher	*247342	1	Repair Kit
48268	1	Gland packing w asher	247384	1	Orifice
50558	2	Bolt	271598©	1	Hose
50178	2	Bolt	271599©	1	Adapter Elbow

+ Included in 83001 Lower Pump Tube Repair kit

*For 241814 Hydraulic Cylinder

TORQUE SPECIFICATIONS	
1 10 - 15 FT. LBS. (14 - 20 NM)	4 80 FT. LBS. (108 NM)
2 30 FT. LBS. (41 NM)	5 90 FT. LBS. (122 NM)
3 45 IN. LBS. (5 NM)	6 100 FT. LBS. (135 NM)

LIMITED WARRANTY

Lincoln Industrial, A Pentair Company, warrants that lubrication equipment, materials dispensing equipment and other related equipment manufactured by it will be free from defects in material and workmanship during the one (1) year following the date of purchase. If equipment proves to be defective during this warranty period, it will be repaired or replaced without charge, provided that factory examination indicated the equipment to be defective. To obtain repair or replacement, it must be shipped, transportation charges prepaid, with proof of date of purchase to a Lincoln authorized Warranty and Service Center, within the one (1) year following the date of purchase.

This warranty is extended to the original retail purchaser only. This warranty does not apply to equipment damaged from accident, overload, abuse, misuse, megligence, faulty installation or abrasive or corrosive materials, or to equipment repaired or altered by anyone not authorized by Lincoln to repair or alter the equipment. This warranty applies only to equipment installed and operated according to the recommendations of Lincoln or its authorized field personnel. No other express warranty applies to lubrication equipment, materials dispensing equipment, and other related equipment manufactured by Lincoln.

ANY IMPLIED WARRANTIES applicable to lubrication equipment, materials dispensing equipment, and other related equipment manufactured by Lincoln INCLUDING THE WARRANTIES OF MERCHANTABILITY AND FITNESS FOR A PRATICULAR PURPOSE WILL LAST ONLY FOR ONE (1) YEAR FROM THE DATE OF PURCHASE. SOME STATES DO NOT ALLOW LIMITATIONS ON HOW LONG AN IMPLED WARRANTY LASTS, SO THE ABOVE LIMIATAION MAY NOT APPLY TO YOU.

In no event shall Lincoln be liable for incidental or consequential damages. The liability of Lincoln on any claim for loss or damage arising out of the sale, resale, or use of lubrication equipment, materials dispensing equipment, and other related equipment shall in no event exceed the purchase price. SOME STATES DO NOT ALLOW THE EXCLUSION OR LIMITATION OF INCIDENTAL OR CONSEQUENTIAL DAMAGES, SO THE ABOVE LIMIATAION OR EXCLUSION MAY NOT APPLY TO YOU.

THIS WARRANTY GIVES YOU SPECIFIC LEGAL RIGHTS AND YOU MAY ALSO HAVE OTHER RIGHTS WHICH VARY FROM STATE TO STATE.

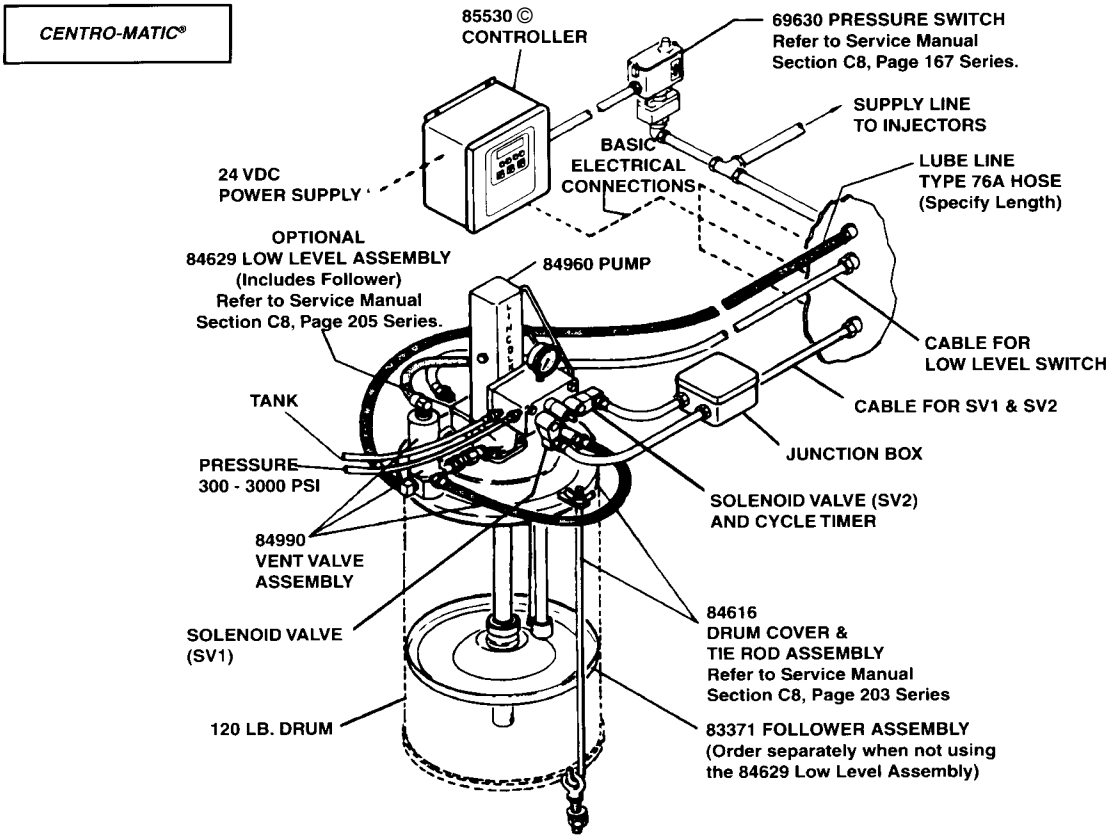

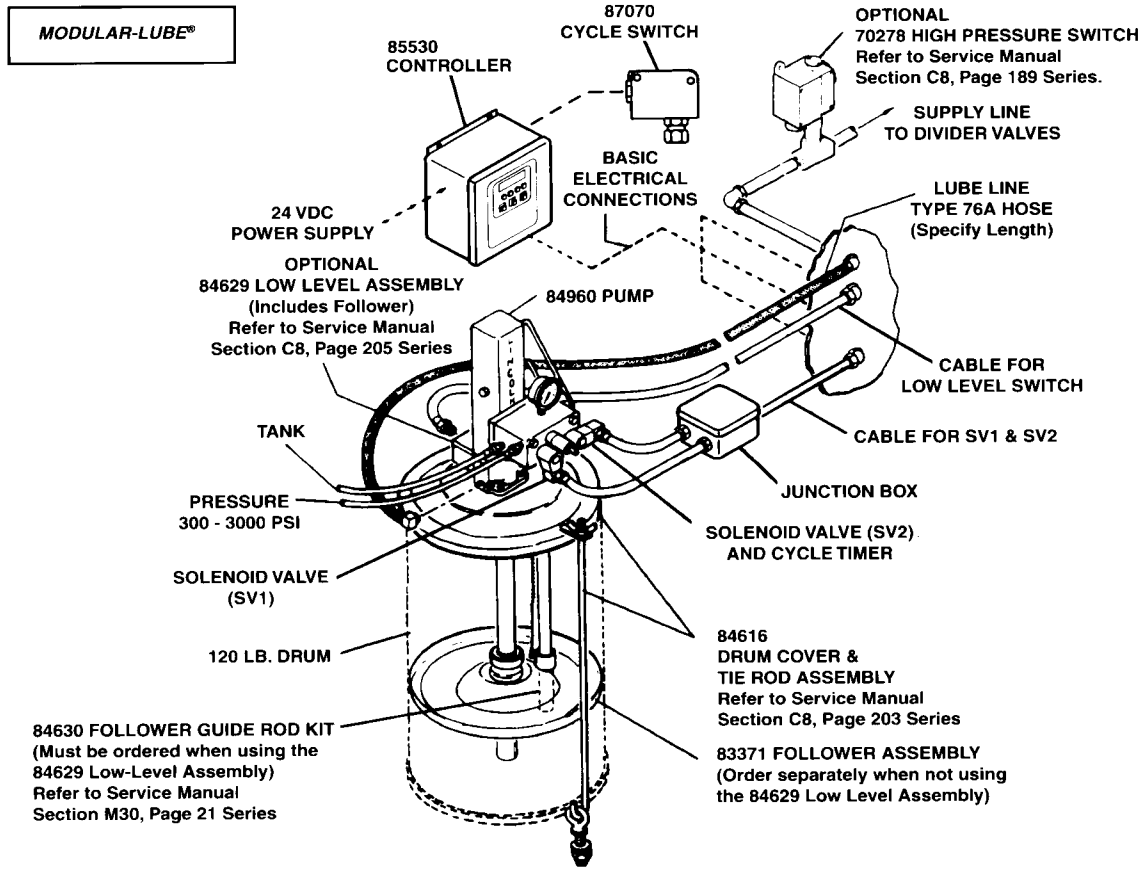

RETAIN THIS INFORMATION FOR FUTURE REFERENCE

When ordering replacement parts, list: Part Number, Description, Model Number and Series Letter.
LINCOLN provides a Distributor Network that stocks equipment and replacement parts.