Installation instructions

Small reservoir refill filter

Model 84013 and 84013A

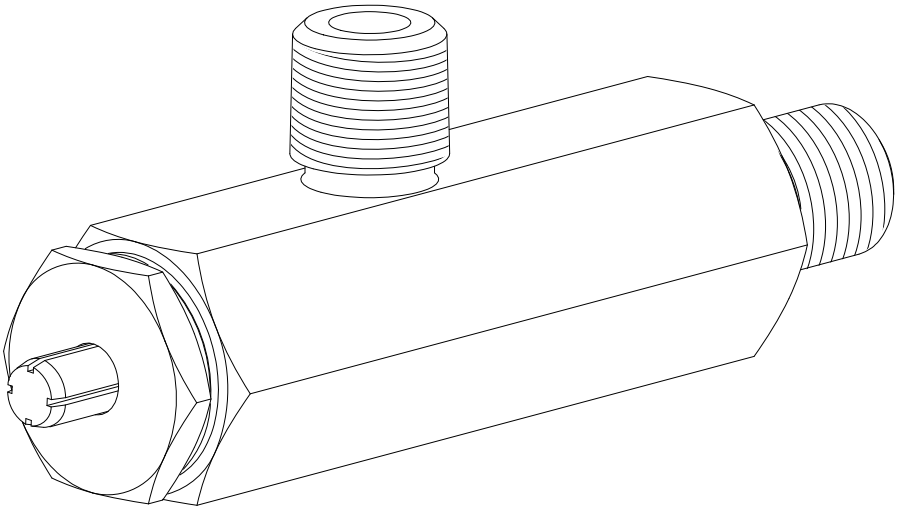

Date of issue	**April 2018**
Form number	**404044**
Version	**3**

Contents

Safety 2
Explanation of signal words for safety 2
Description. 2
Specifications 2
Installation. 3
Operation 3
Disassembly and cleaning 4
Filter cleaning option 1 4
Filter cleaning option 2 4
Filter cleaning option 3 4
Bypass pin replacement. 5
Removal 5
Installation 5
Filter assembly tips. 5
Individual parts break down and parts list. 6
Warranty 8

Safety

Read and carefully observe operating instructions before unpacking and operating filter. Filter must be operated, maintained and repaired exclusively by persons familiar with operating instructions. Local safety regulations regarding installation, operation and maintenance must be followed.

Operate filter only after safety instructions and this service manual are fully understood.

Explanation of signal words for safety

NOTE

Emphasizes useful hints and recommendations as well as information for efficient and trouble-free operation.

⚠ DANGER

Indicates a dangerous situation that will lead to death or severe injury if precautionary measures are ignored.

Description

Model 84013 and 84013A are grease filters used to refill small reservoirs of pumps such as model 203 QuickLub pumps.

Specifications

	Model 84013	Model 84013A
Collapse pressure	600 psi (*41,4 bar*)	600 psi (*41,4 bar*)
Screen size	250µm	500µm
Inlet	1/2 in NPTF	1/2 in NPTF
Outlet	1/2 in NPTF	1/2 in NPTF
Maximum working pressure	5 000 psi (*344,7 bar*)	5 000 psi (*344,7 bar*)
Maximum flow rate	1 gallon/minute (*3,8 liters/minute*)	1.25 gallons/minute (*4,7 liters/minute*)

Installation

1 Shut off all grease flow into grease reservoir.
2 Apply Teflon-based thread sealant to all threaded connections.
3 Connect grease delivery pump outlet hose to 1/2 in NPTF refill filter inlet (**11**).
4 Connect 1/2 in NPTF refill filter outlet (**12**) to hose leading into grease reservoir.

NOTE

Filter 84013 and 84013A should be mounted between delivery pump and grease reservoir being refilled.

Do not exceed maximum flow rate when filling reservoir. Refer to *Specifications*, **page 2**.

Operation

Grease flows through inlet (**11**) and exits from outlet (**12**) under normal conditions while filtering out impurities exceeding 250 microns in size (500 micron for 84013A)*. Under such conditions, bypass pin (**2**) is in extended position (**Fig. 1, A**).

Fluid pressure in filter, or differential pressure, increases as contaminants are filtered out by filter assembly (**1**). When differential pressure from grease filter exceeds 200 psi *(13,8 bar)* due to trapped contaminants, bypass pin (**2**) retracts into filter body (**8**) and fluid bypass is activated, releasing grease through outlet (**13**) (**Fig. 1, B**).

Fig. 1

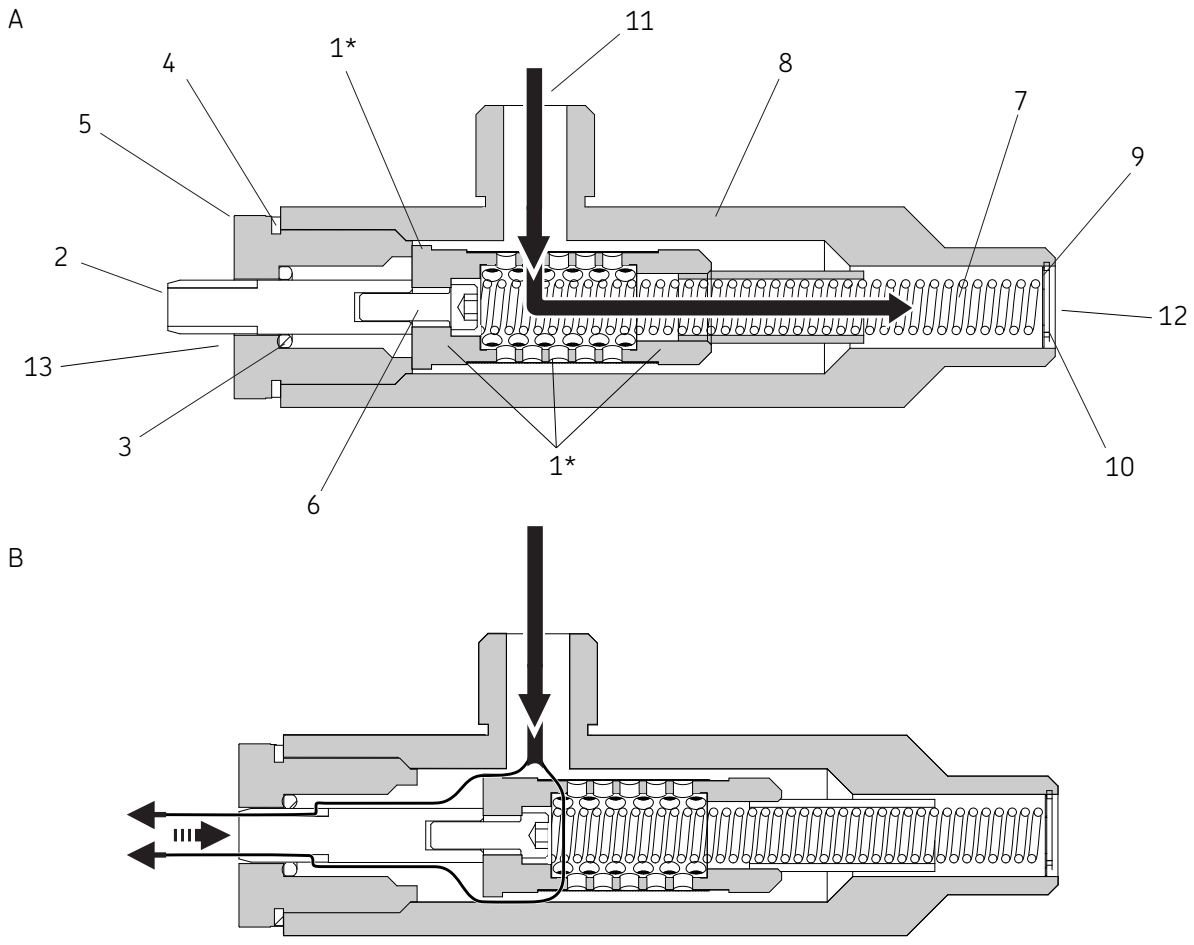

Disassembly and cleaning

Release of grease through bypass outlet (**13**) (**Fig. 1, B, page 3**) indicates bypass filter element assembly (**14**) should be removed and cleaned to restore refill filter to normal operation.

1 Shut off any grease flow to refill filter.
2 Unscrew cap (**5**).
3 Remove bypass filter assembly (**14, 15**) (**Fig. 2**).

Filter cleaning option 1

1 Submerge bypass filter assembly (**14**) in mineral spirits.
2 Brush contaminants from screen of bypass filter assembly (**14**).

NOTE

Bypass filter assembly (**14**) includes filter element (**1**) with precision toleranced to operate in filter body (**8**). Sliding cylinder (**15**) loctited to bypass filter assembly is one to one match with filter body. As a consequence, filter assembly (**1**) is not available as service part.

Disassembly of bypass filter assembly (**14**) is not recommended, except in case of bypass pin replacement.

Use care when handling bypass filter assembly (**14**).

⚠ DANGER

Do not use mineral spirits without personal protective equipment.

Failure to comply will result in death or serious injury.

Filter cleaning option 2

1 Using parts washer, direct flow though rear opening (**15**).
2 Brush contaminants from screen of bypass filter assembly (**14**).

Filter cleaning option 3

Dislodge contaminants from screen of bypass filter assembly (**14**) using compressed air.

Fig. 2

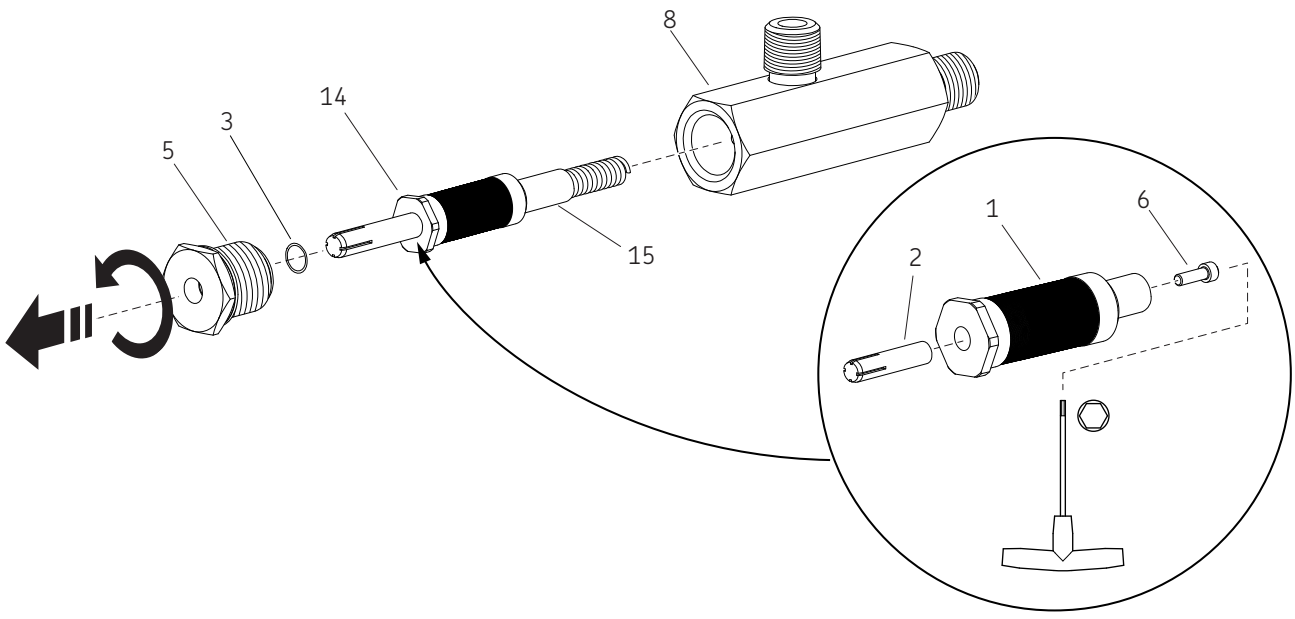

Bypass pin replacement

Removal

1 Using 5/32 in t-handle hex wrench, remove hex screw (**6**) (**Fig. 2, page 4**) from bypass filter assembly (**14**) via opening (**15**).
2 Remove bypass pin (**2**).

Installation

1 Apply one drop of Loctite 243 to inside threading of bypass pin (**2**).
2 Using 5/32 in hex wrench, hand tighten hex screw until bypass pin (**2**) is firmly against filter assembly (**1**).
3 Place cap (**5**) back as shown in **Fig. 3** and screw back into filter body. Make sure indicator is being pushed in while screwing cap to avoid indicator pin turning with cap.
4 Verify indicator pin slides freely with no binding when flush with cap.

NOTE
Allow at least 24 hours for Loctite to cure before use after assembling bypass filter assembly (**14**).

NOTE
Lubricate o-ring (**3**) prior to assembling for smooth travel of indicator pin. Leave o-ring slightly behind grease bypass slots when placing indicator assembly into cap.

Filter assembly tips

1 To aid bypass filter assembly alignment, insert rod-like tool, such as t-handle hex wrench, through outlet (**11**) of filter body (**8**) into bypass filter assembly (**14**) via spring (**7**) (**Fig. 3**).
2 Tighten cap (**5**) into filter body (**8**), periodically depressing bypass pin (**2**) to ensure it slides freely within filter body (**8**).

Fig. 3

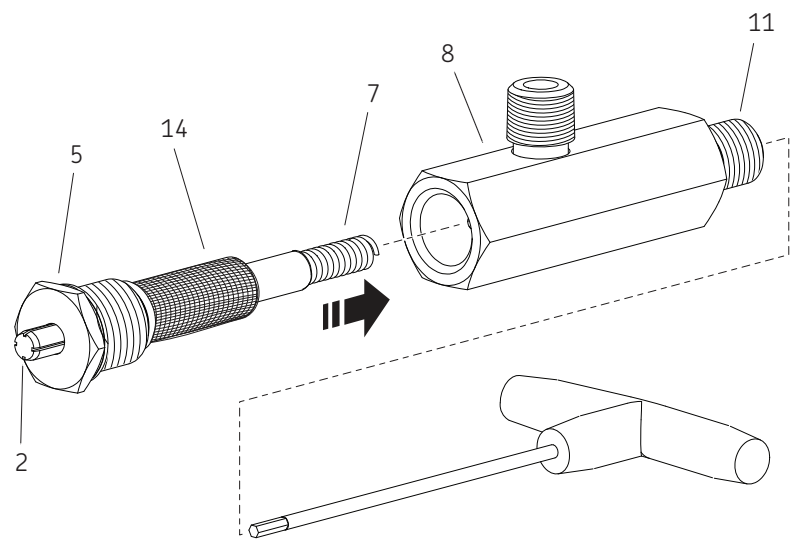

Fig. IPB 1*

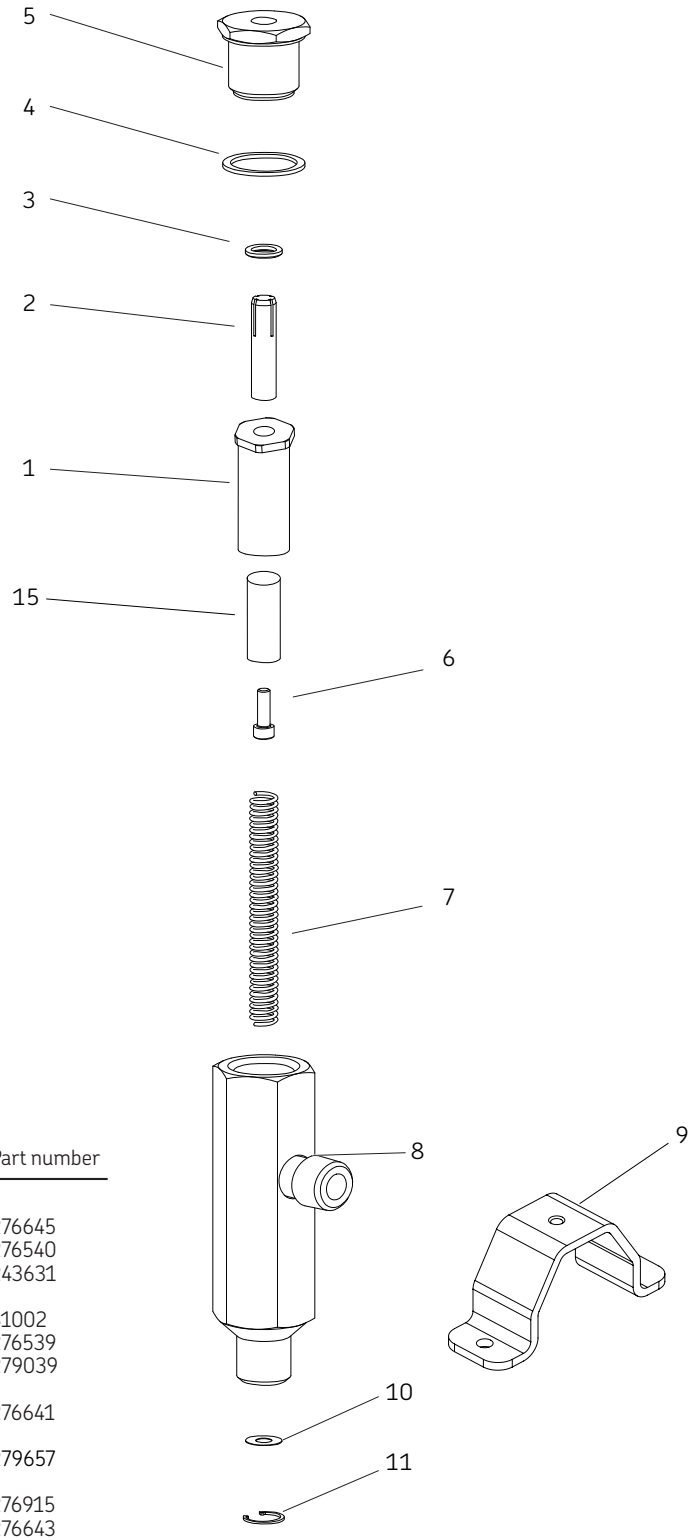

Parts list

Item number	Description	Part number
1	Filter element assembly [1] [2]	276645
2	Bypass pin	276540
3	O-ring	243631
4	Gasket	31002
5	Cap	276539
6	Hex screw	279039
7	Spring	276641
8	Filter body [1]	
9	Bracket, filling filter*	279657
10	Washer	276915
11	Retaining ring	276643
15	Slide [1]	276534

[1] Not available as a service part.
[2] Alternative filter element assembly 276645A (500 um).
* Indicates change.

This page left intentionally blank.

Warranty

The instructions do not contain any information on the warranty. This can be found in the General Conditions of Sales, available at: www.lincolnindustrial.com/technicalservice or www.skf.com/lubrication.

skf.com | lincolnindustrial.com

April 2018 · Form 404044 Version 3