Model Nos. 83578, 84578
AIR OPERATED EJECTOR

23:1 RATIO

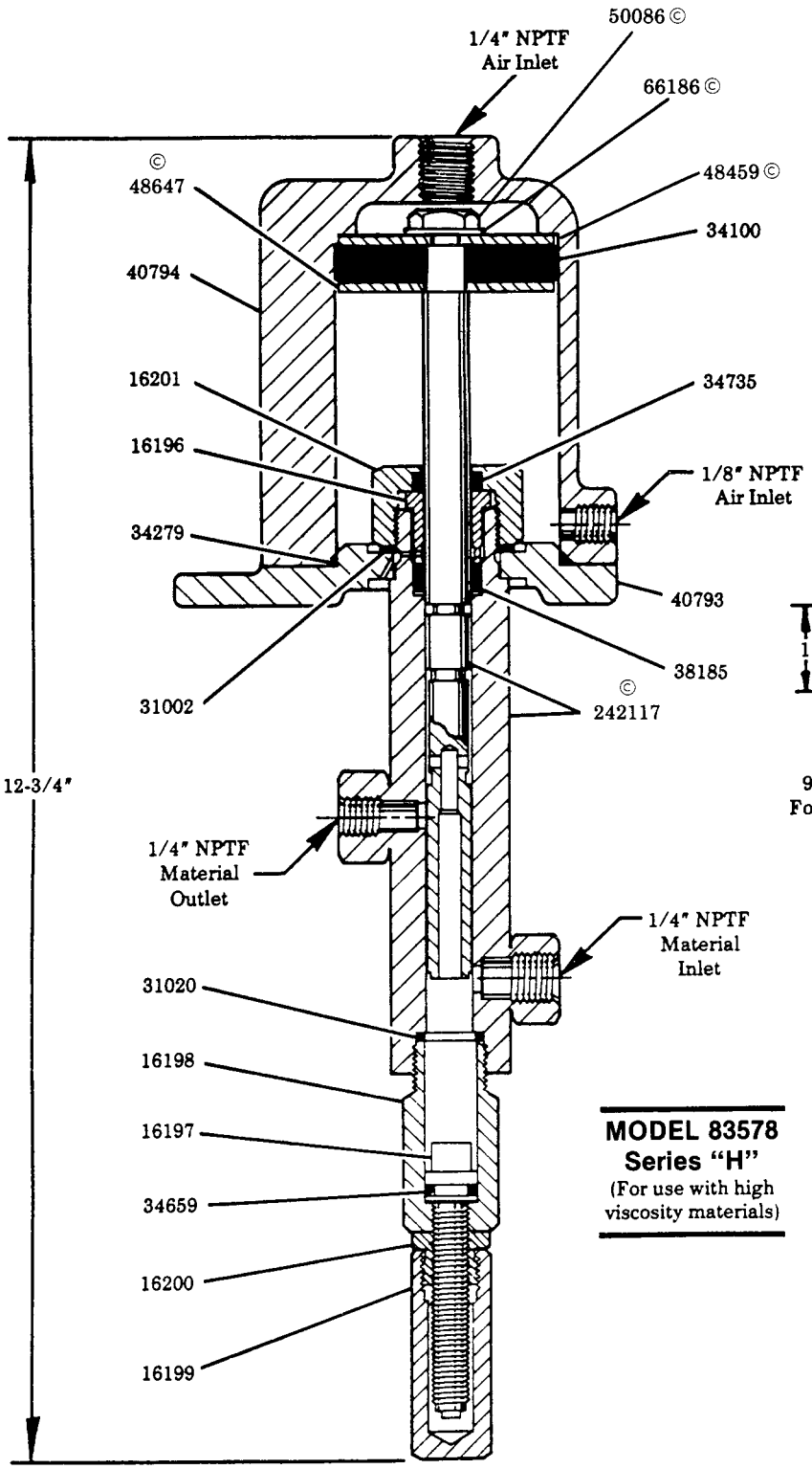

MODEL 83578
Series "H"
(For use with high viscosity materials)

© INDICATES CHANGE

83578 SPECIFICATIONS

	MIN.	MAX.
PRIMING PRESSURE	—	1,000 psi
AIR OPERATING PRESSURE	80 psi	100 psi
OUTPUT PER CYCLE	.015 in³	.2 in³

NOTE

A length of hose must be used at the material inlet to prevent a hydraulic lock which may occur if rigid piping is used.

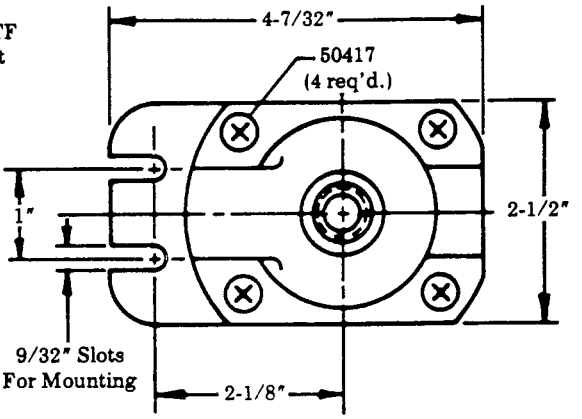

SERVICE PARTS

Part	Description
16196	Packing sleeve
16197	Adjustment screw
16198	Nose adapter
16199	Adjustment screw cap
16200	Lock nut
16201	Packing nut
*31002	Gasket
*31020	Gasket
*34100	Piston packing (Buna-N)
*34279	O-ring (Buna-N)
*34659	O-ring (Viton)
*34735	O-ring (Viton)
*38185	U-cup (Polyethylene)
40793	Mounting base
40794	Air cylinder
48459	Washer
48647	Washer
50086	Screw
50417	Screw
66186	Lockwasher
242117	Body & plunger assembly

*Recommended Service Parts Inventory

Copyright 1990
Printed in U.S.A.

84578 SPECIFICATIONS

	MIN.	MAX.
PRIMING PRESSURE	—	100 psi
AIR OPERATING PRESSURE	80 psi	100 psi
OUTPUT PER CYCLE	.015 in³	.2 in³

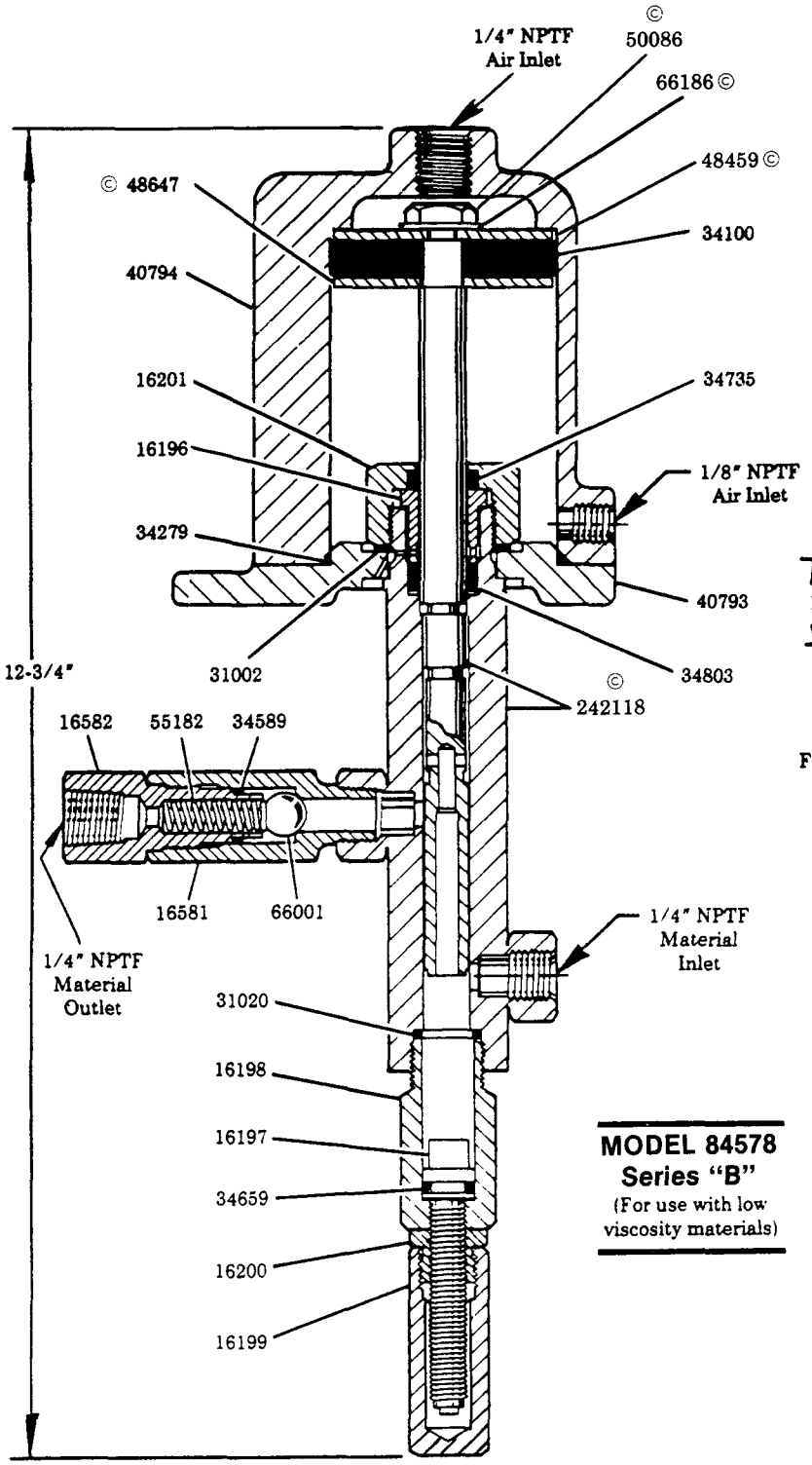

MODEL 84578
Series "B"
(For use with low viscosity materials)

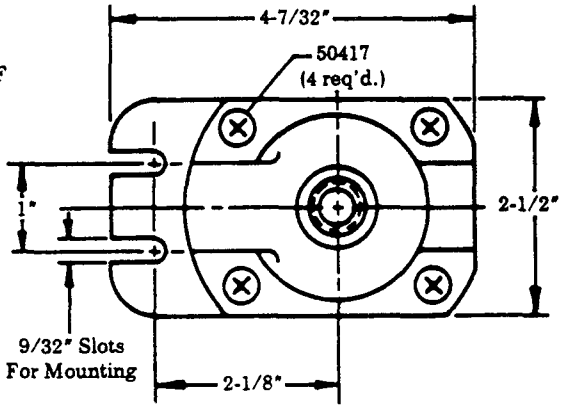

SERVICE PARTS

Part	Description
16196	Packing sleeve
16197	Adjustment screw
16198	Nose adapter
16199	Adjustment screw cap
16200	Lock nut
16201	Packing nut
16581	Male check body
16582	Female check body
*31002	Gasket
*31020	Gasket
*34100	Piston packing (Buna-N)
*34279	O-ring (Buna-N)
34589	O-ring (Viton)
*34659	O-ring (Viton)
*34735	O-ring (Viton)
*34803	U-cup (Polyethylene)
40793	Mounting base
40794	Air cylinder
48459	Washer
48647	Washer
50086	Screw
50417	Screw
55182	Spring
66001	Ball check
66186	Lockwasher
242118	Body & plunger assembly

© INDICATES CHANGE

* Recommended Service Parts Inventory

RETAIN THIS INFORMATION FOR FUTURE REFERENCE

When ordering replacement parts, list: Part Number, Description, Model Number, and Series Letter.

LINCOLN provides a Distributor Network that stocks equipment and replacement parts.