AIR OPERATED OIL PUMP

SINGLE STROKE, AIR RETURN

Model 82676

Series "D"

SPECIFICATIONS

Ratio	Lubricant Output (cu. in.)	Air Inlet	Lubricant Outlet	LUBRICANT OPERATING PRESSURE (P.S.I.)			
				Type of System	Minimum	Maximum	Recommended
20:1	2.4*	1/4" N.P.T. Female	1/4" N.P.T. Female	SL-42 SL-43	750 with 40 P.S.I. Air	1,000 with 50 P.S.I. Air	850 with 45 P.S.I. Air

* Based on lubricants that are free of entrapped air. Lubricants that are aerated will reduce output of pump.

The 82676 Pump is used as the pumping unit for a centralized lubrication system having a single line circuit of SL-42 Injectors and SL-43 Injectors.
It is an air operated single stroke pump requiring air for both forward and return stroke and discharges * 2.4 cu. in. of fluid lubricant into the circuit for each pump stroke (Lubrication Cycle).
The total quantity of lubricant needed for the lubrication cycle of the system must not exceed the amount of lubricant discharged per pump stroke.

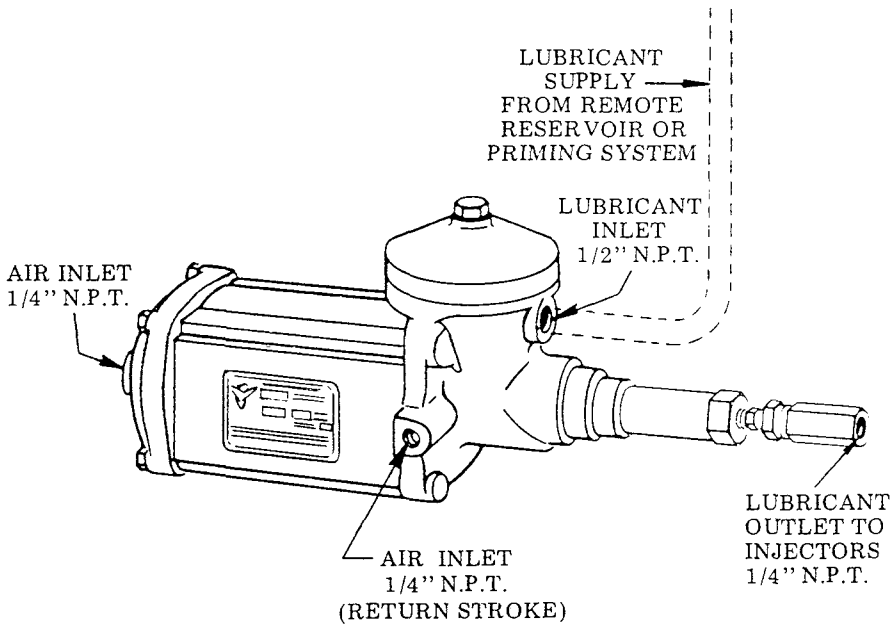

TO PRIME SYSTEM

SUPPLY LINES: After pump reservoir has been filled with recommended lubricant, loosen (do not remove) all plugs in dead ends of the injector manifolds and supply lines. Operate pump until lubricant flows from around threads of any loosened plug. Tighten this plug and continue to operate pump until lubricant flows from around threads of another loosened plug. Repeat this procedure until all supply lines are primed.

FEEDER LINES: Fill each feed line with lubricant before connecting lines to outlet of injectors and bearings. This will prevent having to cycle each injector to fill line between injector and bearing.

INJECTORS: Check each injector for proper operation. Injector stem moves when injector discharges lubricant to bearing. This may require cycling system several times. After checking injectors for operation adjust injectors for the volume required for each bearing.

LINCOLN

LINCOLN, One Lincoln Way
St. Louis, Missouri 63120-1578
(314) 679-4200 Customer Service, (314) 679-4300

NOTE:

Remote priming pressure must not exceed 80 PSI.

TO CLEAN LINE CHECK 83114

Remove 91733 Check and examine packing for presence of foreign particles. If packing is damaged, replace 91733 Check.

Remove 66250 Ball Check, 55194 Spring and 13649 Ball Stop from 13557 Check Retainer. Examine for presence of foreign particles. Clean thoroughly.

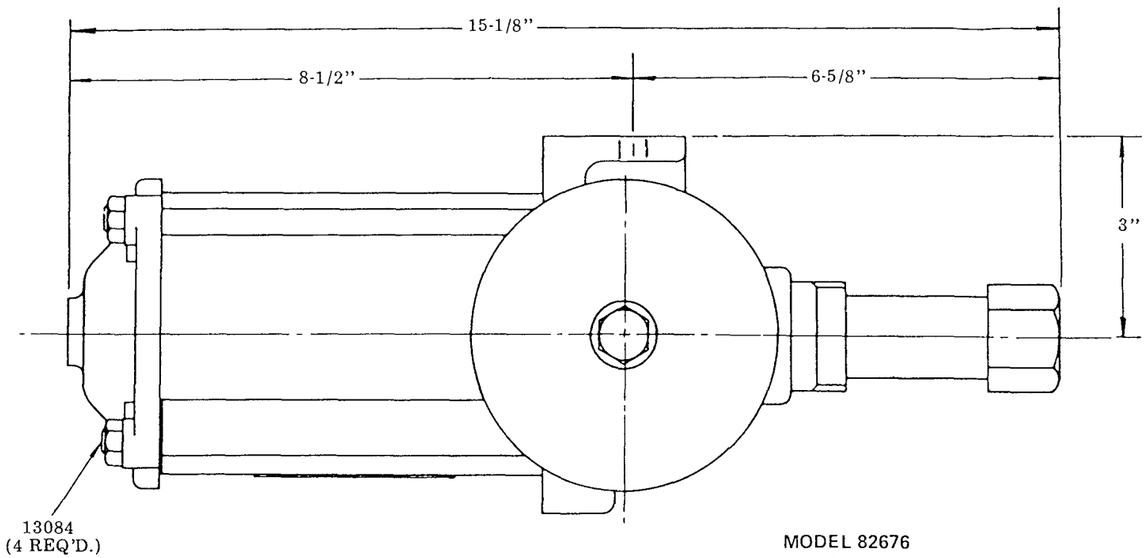

MODEL 82676
AIR OPERATED
SINGLE STROKE PUMP
SERIES "D"

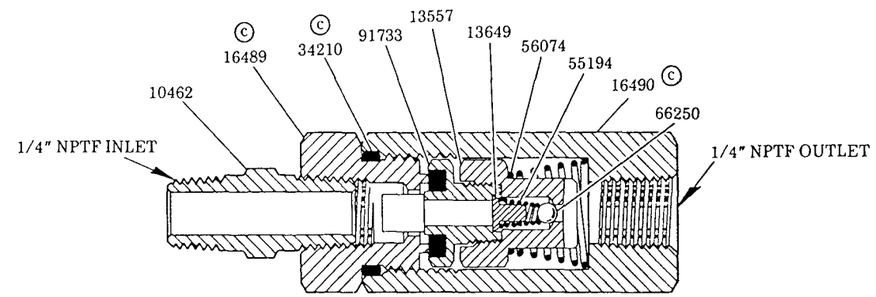

83114
LINE CHECK

© Indicates change

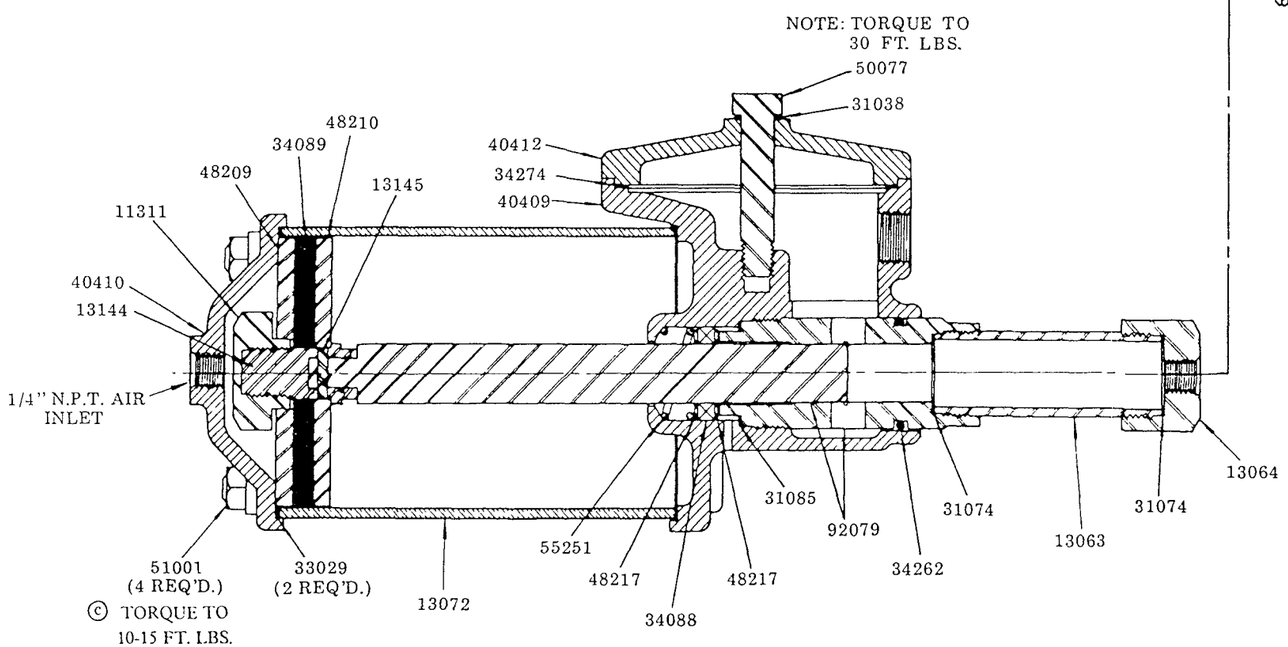

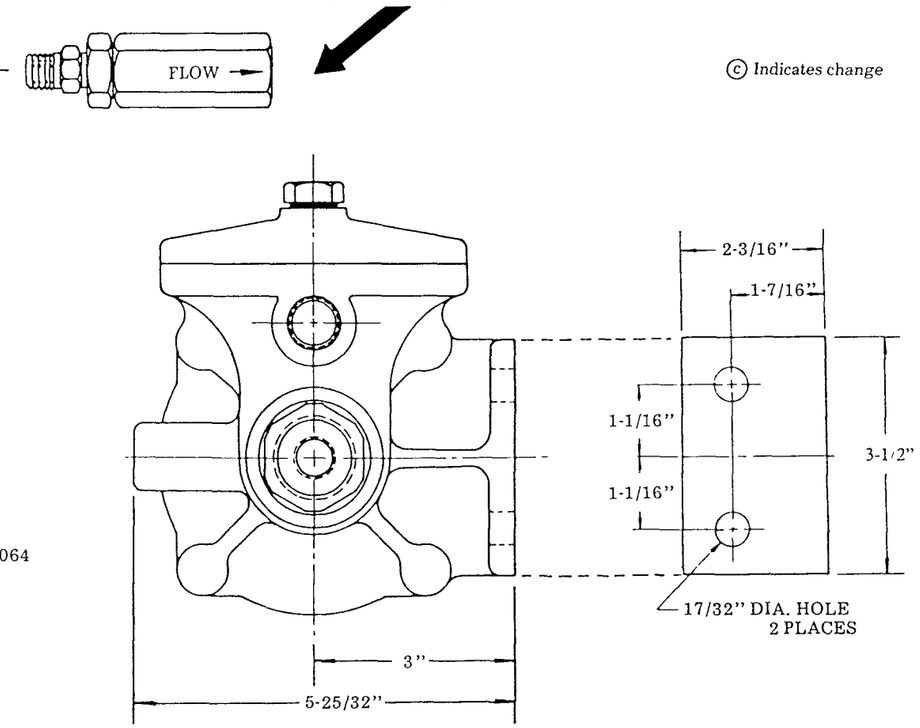

TYPES OF INSTALLATIONS

Frequency of lubrication cycle can be controlled Manually, Mechanically or Electrically – Pump requires a four-way air valve for operation.

MECHANICAL CONTROL

When using mechanical motion of machine to control lubrication frequency, four-way valve is engaged by cam permitting air to pass through valve to pump forcing air piston forward and lubricant through supply line to injectors. When valve is disengaged, air exhausts back through valve. Air also flows into return side of pump reversing air piston and completing lubrication cycle. Cam dwell on four-way valve must be arranged for a minimum of 10 seconds.

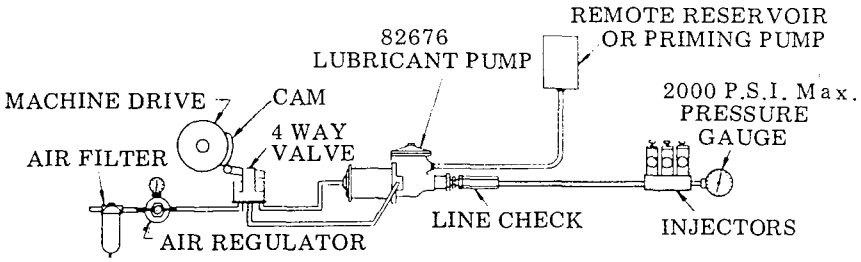

ELECTRICAL CONTROL

Electrical time switch opens four-way valve permitting air to flow to pump forcing air piston forward and lubricant through supply line to injectors. When valve closes, air exhausts back through valve. Air also flows into return side of pump reversing air piston and completing lubrication cycle. Frequency of cycle can be set as desired by adjustable pins in time switch. See separate instructions of Time Switch 68358.

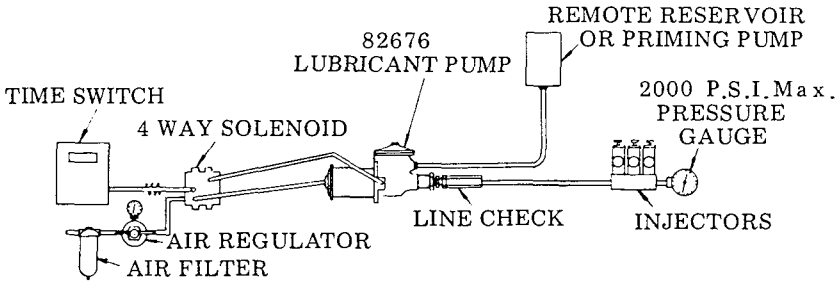

MANUAL CONTROL

Opening four-way valve for a minimum of 10 seconds permits air to flow to pump forcing air piston forward and lubricant through supply line to injectors. When valve is closed air exhausts back through valve. Air also flows into return side of pump reversing air piston and completing lubrication cycle.

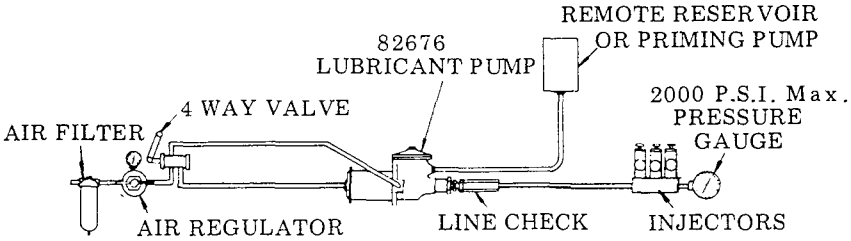

WHAT TO DO IF:

PUMP LOSES PRIME — Check lubricant supply.

SYSTEM FAILS TO CYCLE and calculated system planning has been followed — Lubricant is leaking by packing of 91733 Check or 66250 Check. Remove and clean. Failure of injectors to cycle can also be caused by leak in supply lines. Examine supply lines and connections.

PUMP FAILS TO OPERATE — Check air supply. 40 P S I G minimum required.

SERVICE PARTS

PART NO.	DESCRIPTION	PART NO.	DESCRIPTION	PART NO.	DESCRIPTION
10462	Nipple	31038	Gasket	48209	Washer
11311	Piston nut	* 31074	Gasket	48210	Washer
13063	Pump tube	* 31085	Gasket	48217	Washer
13064	Outlet	* 33029	Gasket	50077	Bolt
13072	Air cylinder	* 34088	Packing	51001	Nut
13084	Tie rod	* 34089	Packing	* 55194	Spring
13144	Packing stud	* 34210	O-ring	55251	Spring
13145	Pin	* 34262	O-ring	56074	Spring
13557	Check retainer	* 34274	Gasket	* 66250	Steel ball
13649	Ball stop	40409	Body casting	83114	Line check assembly
16489	Check seat	40410	Cylinder cap	* 91733	Check
16490	Check body	40412	Body cap	92079	Bushing & plunger

*Recommended Service Parts Inventory

RETAIN THIS INFORMATION FOR FUTURE REFERENCE

When ordering replacement parts, list: Part Number, Description, Model Number, and Series Letter.

LINCOLN provides a Distributor Network that stocks equipment and replacement parts.
A list of Authorized Service Departments will be furnished upon request.